EITEL-McCULLOUGH, INC.
SAN CARLOS, CALIFORNIA

EM 113
TRAVELING WAVE TUBE

The EM113 delivers 1 kw of pulse power from 2.0–4.0 Gc. It is of metal-ceramic construction and is suitable for airborne and missile applications. The focusing is accomplished by periodic permanent magnet and compensated for operation over the temperature range −65° C to +125° C.

ELECTRICAL SPECIFICATIONS

Absolute Ratings

	Maximum
Filament Voltage	7.0 Volts
Pulse Cathode Voltage	−8000 vdc
Peak Cathode Current	2.0 adc
Duty Cycle	2%

Operating and Performance Data

Filament Voltage	6.3 Volts
Filament Current	3.0 Amperes
Cathode Voltage	−7500 Vdc
Peak Cathode Current	1.3 adc
Duty Cycle	2%
Frequency Range	2.0–4.0 Gc
Small Signal Gain—Minimum	36 db
Peak Saturated Power Out—Minimum	1.0 kw
Saturated Gain—Minimum	30 db

ENVIRONMENTAL SPECIFICATIONS

Complies with MIL-5400 Class II Equipment

Temperature	−65° C to +125° C

MECHANICAL SPECIFICATIONS

Operating Position	Any
Input Coupling, rf	TNC
Output Coupling, rf	TNC
Focusing	PPM
Cooling	75 CFM forced air
Dimensions	See outline drawing
Weight	9 lbs.
Supply Connections	Cathode—yellow Filament—brown Grid—green

NOTE: Electrode Voltages are with respect to cathode; tube shell at ground potential.

(EFFECTIVE 3-15-64) COPYRIGHT 1964 BY EITEL-MC CULLOUGH, INC. PRINTED IN U.S.A.

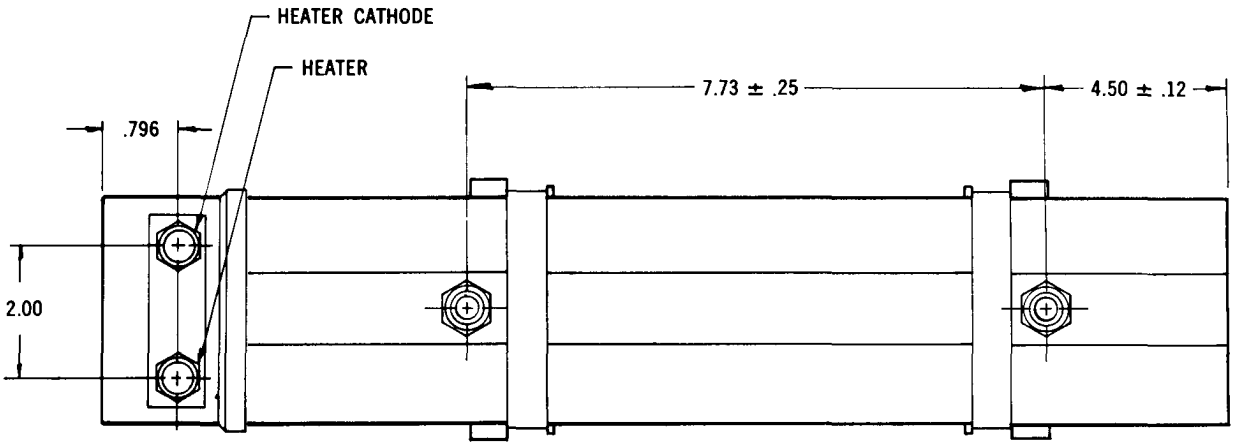
HEATER CATHODE
HEATER
.796
7.73 ± .25
4.50 ± .12
2.00

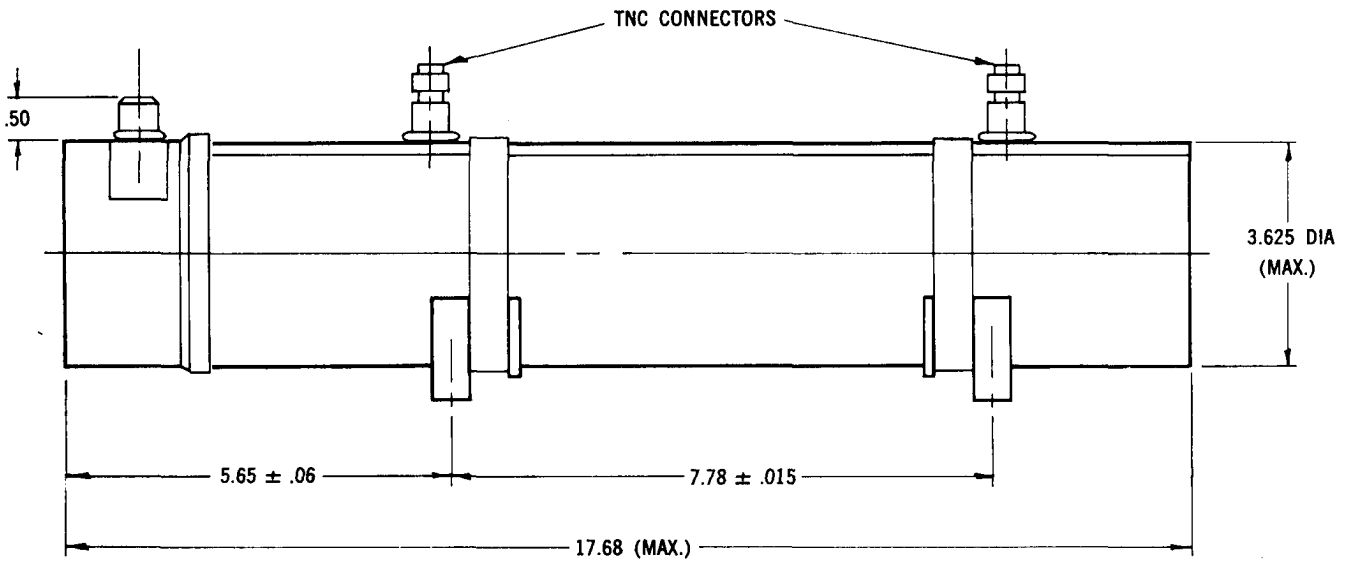
TNC CONNECTORS
.50
3.625 DIA
(MAX.)
5.65 ± .06
7.78 ± .015
17.68 (MAX.)

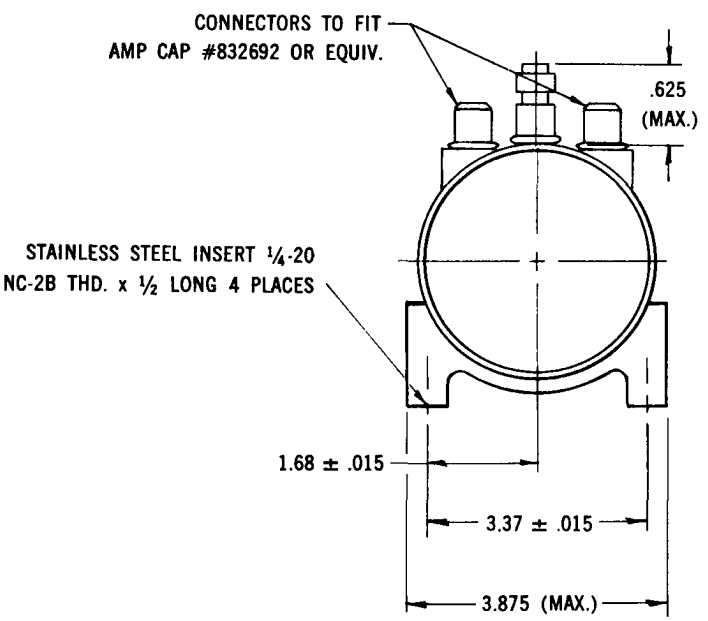
CONNECTORS TO FIT
AMP CAP #832692 OR EQUIV.
.625
(MAX.)
STAINLESS STEEL INSERT ¼-20
NC-2B THD. x ½ LONG 4 PLACES
1.68 ± .015
3.37 ± .015
3.875 (MAX.)