A.F. PENTODE

Pentode intended for use as A.F. amplifier

QUICK REFERENCE DATA			
Anode current	I_a	3.0	mA
Transconductance	S	2.2	mA/V
Amplification factor	μ_{g2g1}	38	-
Internal resistance	R_i	2.5	MΩ

HEATING: Indirect by A.C. or D.C.; series or parallel supply

Heater voltage	V_f	6.3	V
Heater current	I_f	200	mA

DIMENSIONS AND CONNECTIONS Dimensions in mm

Base: Noval

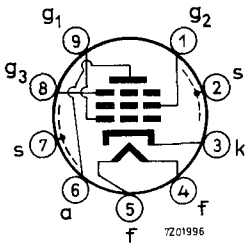

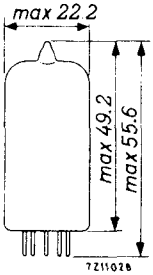

CAPACITANCES

Grid No.1 to all except anode	$C_{g_1(a)}$		3.8	pF
Anode to all except grid No.1	$C_{a(g_1)}$		5.1	pF
Anode to grid No.1	C_{ag_1}	max.	0.05	pF
Grid No.1 to heater	C_{g_1f}	max.	0.0025	pF

TYPICAL CHARACTERISTICS

Anode voltage	V_a	250	V
Grid No.3 voltage	V_{g_3}	0	V
Grid No.2 voltage	V_{g_2}	140	V
Grid No.1 voltage	V_{g_1}	-2.2	V
Anode current	I_a	3.0	mA
Grid No.2 current	I_{g_2}	0.6	mA
Transconductance	S	2.2	mA/V
Amplification factor	$\mu_{g_2g_1}$	38	-
Internal resistance	R_i	2.5	MΩ

OPERATING CHARACTERISTICS as A.F. amplifier

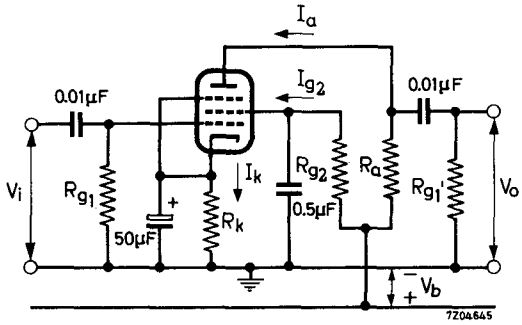

Supply voltage	V_b	400	350	300	250	200	150	V
Anode resistor	R_a	100	100	100	100	100	100	kΩ
Grid No.2 resistor	R_{g_2}	390	390	390	390	390	390	kΩ
Cathode resistor	R_k	1000	1000	1000	1000	1000	1000	Ω
Grid resistor next stage	R_{g_1}'	330	330	330	330	330	330	kΩ
Cathode current	I_k	3.2	2.75	2.4	2.0	1.55	1.05	mA
Voltage gain 1)	V_o/V_i	140	134	129	123	117	110	-
Output voltage	V_o	85	74	62	50	38	27	V_{RMS}
Total distortion	d_{tot}	5	5	5	5	5	5	%

1) Measured at small input voltages

OPERATING CHARACTERISTICS (continued)

Supply voltage	V_b	400	350	300	250	200	150	V
Anode resistor	R_a	220	220	220	220	220	220	kΩ
Grid No.2 resistor	R_{g_2}	1	1	1	1	1	1	MΩ
Cathode resistor	R_k	2200	2200	2200	2200	2200	2200	Ω
Grid resistor next stage	$R_{g'_1}$	680	680	680	680	680	680	kΩ
Cathode current	I_k	1.45	1.3	1.1	0.9	0.75	0.5	mA
Voltage gain [1])	V_o/V_i	210	205	194	185	173	147	-
Output voltage	V_o	72	62	53	44	35	22	V_{RMS}
Total distortion	d_{tot}	5	5	5	5	5	5	%

As triode connected A.F. amplifier (g_2 connected to anode, g_3 to cathode)

Supply voltage	V_b	400	350	300	250	200	V
Anode resistor	R_a	47	47	47	47	47	kΩ
Cathode resistor	R_k	1200	1200	1200	1200	1200	Ω
Grid resistor next stage	$R_{g'_1}$	150	150	150	150	150	kΩ
Anode current	I_a	3.6	3.15	2.7	2.25	1.8	mA
Voltage gain	V_o/V_i	26	25	25	25	24	-
Output voltage ($I_g = 0.3\mu A$)	V_o	68	58	46	36	24	V_{RMS}
Total distortion	d_{tot}	5	5	5	5	5	%

Supply voltage	V_b	400	350	300	250	200	V
Anode resistor	R_a	100	100	100	100	100	kΩ
Cathode resistor	R_k	2200	2200	2200	2200	2200	Ω
Grid resistor next stage	$R_{g'_1}$	330	330	330	330	330	kΩ
Anode current	I_a	2.0	1.8	1.5	1.25	1.0	mA
Voltage gain	V_o/V_i	28	28	27.5	27.5	27	-
Output voltage ($I_g = 0.3\mu A$)	V_o	75	63	51	42	30	V_{RMS}
Total distortion	d_{tot}	5	5	5	5	5	%

Supply voltage	V_b	400	350	300	250	200	V
Anode resistor	R_a	220	220	220	220	220	kΩ
Cathode resistor	R_k	3900	3900	3900	3900	3900	Ω
Grid resistor next stage	R_{g_1}'	680	680	680	680	680	kΩ
Anode current	I_a	1.1	0.95	0.8	0.7	0.55	mA
Voltage gain	V_o/V_i	29	29	29	28	28	-
Output voltage ($I_g = 0.3\mu A$)	V_o	71	60	52	42	30	V_{RMS}
Total distortion	d_{tot}	5	5	5	5	5	%

OPERATING CHARACTERISTICS (continued)

Microphonic effect

A sensitivity of 0.5 mV for an output of 50 mW (or 5 mV for an output of 5 W) is permissible in those equipments where an output of 50 mW in the loudspeaker does not produce an average acceleration on the tube higher than 0.015 g at any frequency higher than 500 Hz or higher than 0.06 g at any frequency lower than 500 Hz.

Hum level

The hum disturbance level will be 3 μV (max. 5 μV) when Z_{g_1} is smaller than 0.5 MΩ at f = 50 Hz, the cathode resistor is decoupled by a capacitor of at least 100 μF and pin 4 is earthed. With the centre tap of the heater supply earthed this value will be 1 μV (max. 2 μV).

Noise voltage

The equivalent noise voltage on g_1 is approximately 2 μV for the frequency range from 25 to 10 000 Hz at V_b = 250 V and R_a = 100 kΩ.

LIMITING VALUES (Design centre rating system)

Anode voltage	V_{a_o}	max.	550	V
	V_a	max.	300	V
Anode dissipation	W_a	max.	1.0	W
Grid No.2 voltage	$V_{g_{2o}}$	max.	550	V
	V_{g_2}	max.	200	V
Grid No.2 dissipation	W_{g_2}	max.	0.2	W
Grid No.1 circuit resistor				
if $W_a < 0.2$ W	R_{g_1}	max.	10	MΩ
if $W_a > 0.2$ W	R_{g_1}	max.	3	MΩ
with grid current biasing	R_{g_1}	max.	22	MΩ
Cathode current	I_k	max.	6	mA
Cathode to heater voltage				
cathode positive	V_{kf}	max.	100	V
cathode negative	V_{kf}	max.	50	V

PHILIPS

Data handbook

Electronic components and materials

EF86

page	sheet	date
1	1	1970.01
2	2	1970.01
3	3	1970.01
4	4	1970.01
5	FP	1999.08.16