A.F. VOLTAGE AMPLIFYING PENTODE

EF36

EF37A

High gain pentode for use in a.f. amplifiers.

The EF37A has an anti-microphonic construction and its heater is designed to reduce hum. Except for these differences, the valve is identical to the EF36.

HEATER

Suitable for series or parallel operation a.c. or d.c.

V_h	6.3	V
I_h	200	mA

In order to reduce the hum to a minimum the centre tap of the transformer winding which feeds the heaters should be connected to the chassis. The impedance between cathode and chassis should be as small as possible (<40Ω).

CAPACITANCES

c_{a-g1}	<0.02	pF
c_{in}	5.5	pF
c_{out}	8.5	pF

CHARACTERISTICS

V_a	250	V
V_{g2}	100	V
V_{g3}	0	V
I_a	3.0	mA
V_{g1}	−2.0	V
I_{g2}	800	μA
g_m	1.8	mA/V
r_a	2.5	MΩ
μ_{g1-g2}	28	

OPERATING CONDITIONS AS RESISTANCE COUPLED A.F. AMPLIFIER, CONNECTED AS A PENTODE

V_b (V)	R_a (kΩ)	I_k (mA)	R_{g2} (kΩ)	R_k (kΩ)	$\frac{V_{out}}{V_{in}}$	V_{out}* ($V_{r.m.s.}$)	R_{g1}** (kΩ)
400	100	3.4	330	1.2	115	80	330
350	100	2.9	330	1.2	112	69	330
300	100	2.5	330	1.2	108	59	330
250	100	2.1	330	1.2	103	49	330
200	100	1.7	330	1.2	98	39	330
400	220	1.8	680	2.2	180	81	680
350	220	1.6	680	2.2	176	69	680
300	220	1.3	680	2.2	170	58	680
250	220	1.1	680	2.2	163	48	680
200	220	0.9	680	2.2	152	37	680

* D_{tot}=5%.

** R_{g1} is the grid resistance of the following valve.

OPERATING CONDITIONS AS RESISTANCE COUPLED A.F. AMPLIFIER, CONNECTED AS A TRIODE

With g_2 connected to a, g_3 connected to k.

V_b (V)	R_a (kΩ)	I_a (mA)	R_k (kΩ)	$\frac{V_{out}}{V_{in}}$	V_{out}* ($V_{r.m.s.}$)	D_{tot}* (%)	R_{g1}** (kΩ)
400	47	4.6	1.2	18.4	67	4.5	150
350	47	4.0	1.2	18.2	57	4.4	150
300	47	3.4	1.2	18.0	48	4.3	150
250	47	2.8	1.2	17.7	38	4.2	150
200	47	2.3	1.2	17.5	29	4.0	150
400	100	2.4	2.2	20.1	66	3.9	330
350	100	2.1	2.2	20.0	57	3.9	330
300	100	1.8	2.2	19.9	48	3.8	330
250	100	1.5	2.2	19.7	38	3.7	330
200	100	1.2	2.2	19.5	28	3.5	330
400	220	1.2	3.9	20.6	61	3.4	680
350	220	1.0	3.9	20.4	52	3.3	680
300	220	0.9	3.9	20.3	44	3.3	680
250	220	0.8	3.9	20.2	35	3.2	680
200	220	0.6	3.9	20.0	26	3.0	680

* Output voltage and distortion at the start of positive grid current. At lower output voltages the distortion is approximately proportional to the voltage.

** R_{g1} is the grid resistance of the following valve.

LIMITING VALUES

$V_{a(b)}$ max.	550	V
V_a max.	300	V
p_a max.	1.0	W
$V_{g2(b)}$ max.	550	V
V_{g2} max.	200	V
p_{g2} max.	300	mW
I_k max.	6.0	mA
V_{g1} max. (I_{g1} = +0.3 μA)	−0.6	V
I_{g2} max.	1.4	mA
R_{g1-k} max. (self bias)	3.0	MΩ
R_{g1-k} max. (fixed bias)	1.0	MΩ
V_{h-k} max.	100	V
R_{h-k} max.	20	kΩ

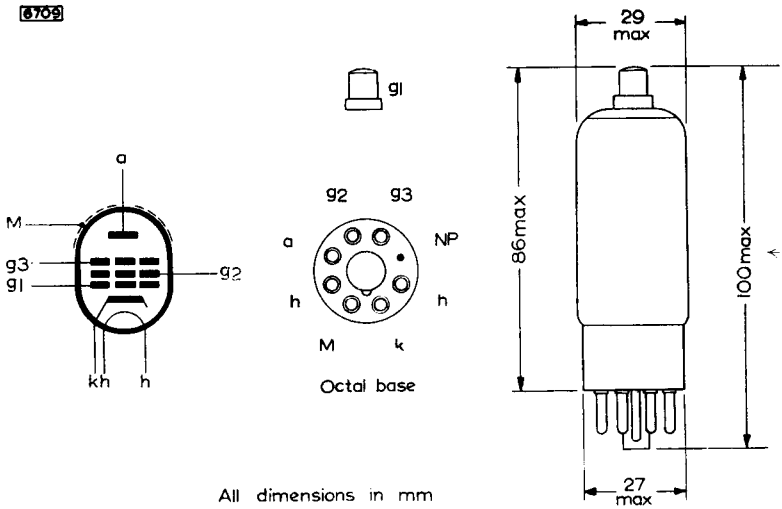

All dimensions in mm

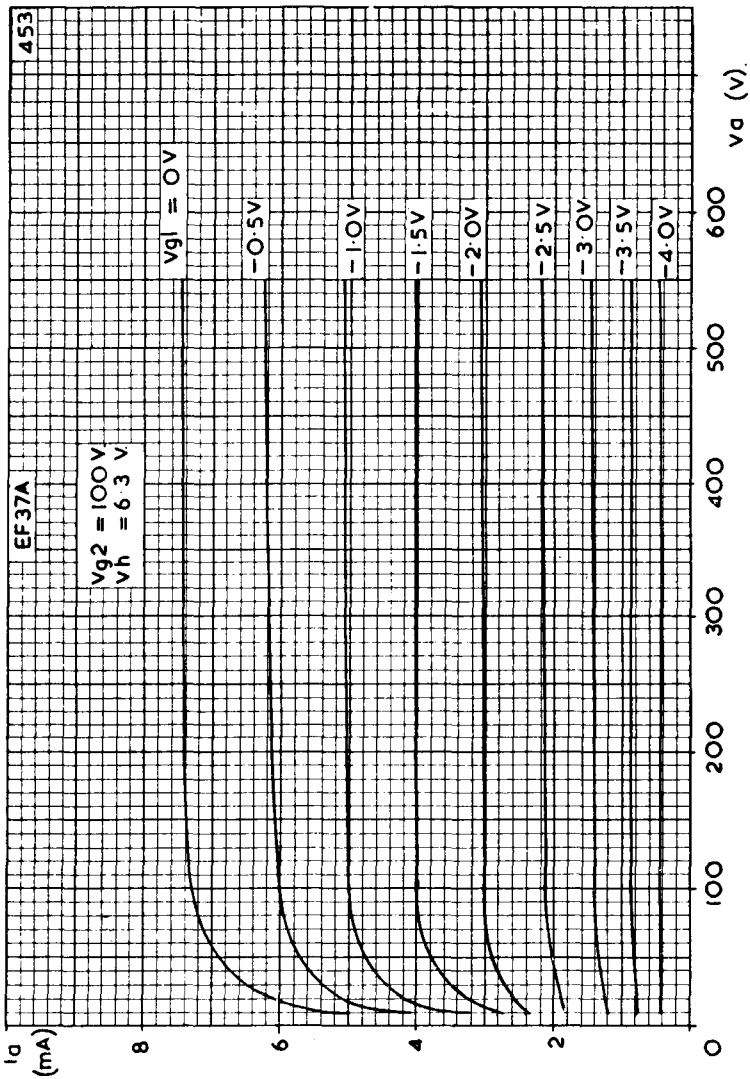

ANODE CURRENT PLOTTED AGAINST ANODE VOLTAGE.
$V_{g2} = 100V$.