ECH 42 Triode-hexode frequency changer

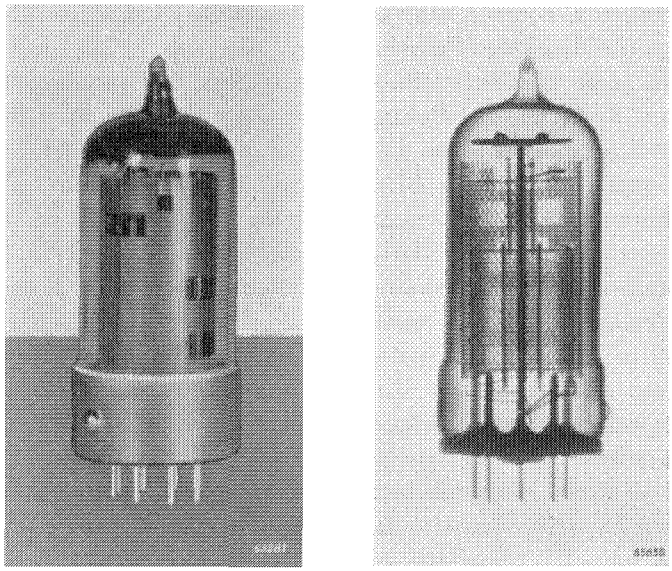

Fig. 1
Normal and X-ray photographs of the ECH 42 (approximately actual size).

The ECH 42 is a frequency changer which, like the ECH 41, is designed as a triode hexode, but various features, including a screen fitted round the entire system, have so improved the design that the properties of the ECH 42 are much superior to those of the ECH 41. The conversion slope of the ECH 42 is variable, being 750 μA/V at the working point.
The third grid of the hexode section and the grid of the triode section are internally connected, as in the earlier model ; hence this valve is also unsuitable for combined A.F. and I.F. amplification.
On the other hand, the ECH 42 can be employed as a combined A.F. amplifier-phase inverter, the triode system being then connected as the A.F. amplifier and the hexode system as the phase inverter. In view of the fact that the third grid of the hexode is connected to the grid of the triode, the voltage on the former will counteract the gain in the hexode, but, since no amplification is required in this case, the efficiency of the valve is not thereby adversely affected.
The initial slope of the triode system, i.e. the slope without oscillator voltage or grid bias, is 2.8 mA/V, so that, from the point of view of oscillatory properties, this valve is better than the ECH 41, the improvement being particularly noticeable on the short-wave range.
Frequency displacement attributable to gain control or mains fluctuations is so slight, even at the shortest wavelengths in the short-wave range, that

it may be disregarded; moreover, the hexode principle ensures that induction effects are so small that they have no effect on the conversion gain.
As with the ECH 41, the screen grids must be fed by means of a potentiometer; if a series resistor is employed, the screen voltage rises as soon as control is applied, resulting in secondary emission and a pronounced drop in internal resistance. With low internal resistance, the conversion gain decreases, but this is not generally detrimental, since the valve is controlled for the very purpose of reducing the gain; however, another result of low internal resistance is that the I.F. transformer in the anode circuit of the hexode is heavily damped, to the detriment of the selectivity. In general, then, the use of a series resistor feed is not recommended.
If the EF 41, or EAF 42, is used as I.F. amplifier in conjunction with the ECH 42 as frequency changer, it is possible to feed the screen grids of both valves by means of a common potentiometer, resulting in a saving of various components.

TECHNICAL DATA OF THE TRIODE-HEXODE ECH 42

Heater data

Heating: indirect, A.C. or D.C., parallel feed

Heater voltage	V_f	=	6.3 V
Heater current	I_f	=	0.23 A

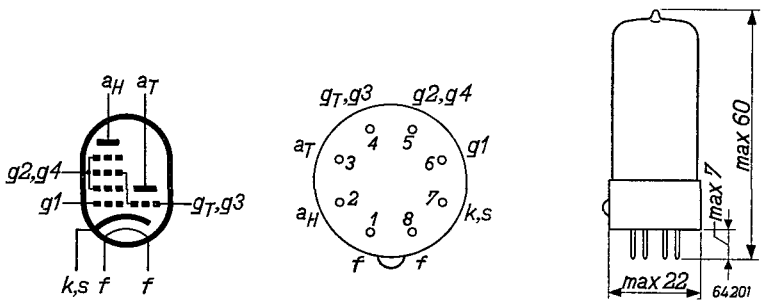

Fig. 2
Electrode arrangement, electrode connections and dimensions (in mm) of the ECH 42.

Capacitances (cold valve)

Hexode section

Input capacitance	C_{g1}	=	4.0 pF
Output capacitance	C_a	=	9.4 pF
Anode - control grid	C_{ag1}	<	0.1 pF
Control grid - heater . .	C_{g1f}	<	0.15 pF

Triode section

Input capacitance . .	$C_{(gT+g3)}$	=	5.9 pF
Output capacitance	C_a	=	2.4 pF
Anode - grid	$C_{(gT+g3)a}$	=	1.3 pF

ECH 42

Between hexode system and triode system

Between the two control grids	$C_{(gT+g3)g1H}$	<	0.35 pF
Between hexode control grid and triode anode	C_{g1HaT}	<	0.06 pF
Between triode grid and hexode anode	$C_{(gT+g3)aH}$	<	0.2 pF
Between the two anodes . . .	C_{aHaT}	<	0.5 pF

Operating characteristics of the hexode system used as mixer (see Figs. 6 to 11 incl.)

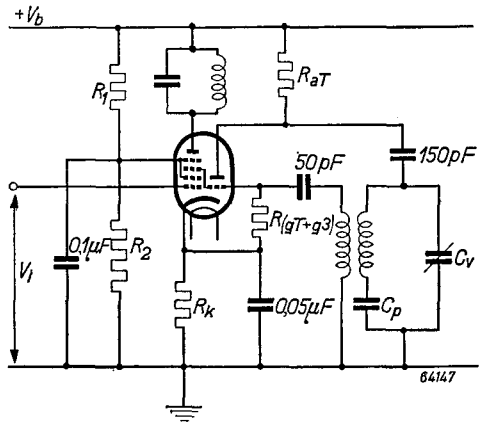

Fig. 3

Anode and supply voltage . .	$V_a = V_b$	=	250	V
Potentiometer for feeding screen grids (Fig. 3)	R_1	=	27	kΩ
	R_2	=	27	kΩ
Biasing resistor	R_k	=	180	Ω
Oscillator grid leak	R_{gT+g3}	=	22[1])	kΩ
Oscillator grid current . .	I_{gT+g3}	=	350[1])	μA
Grid bias	V_{g1}	=	—2 —29	V
Screen grid voltage	V_{g2+g4}	=	85 124	V
Anode current	I_a	=	3.0 —	mA
Screen grid current . . .	I_{g2+g4}	=	3.0 —	mA
Conversion conductance . . .	S_c	=	750 7.5	μA/V
Internal resistance	R_i	=	1.7 >5	MΩ
Equivalent noise resistance . .	R_{eq}	=	100 —	kΩ

[1]) If the grid leak is 47 kΩ instead of 22 kΩ, an oscillator grid current of 200 μA is recommended ; none of the other values is affected.

Typical characteristics of the triode section (see Figs. 14 and 15)

Anode voltage	V_a	=	100 V
Grid voltage	V_g	=	0 V
Anode current	I_a	=	10 mA
Slope	S	=	2.8 mA/V
Amplification factor	μ	=	22

Operating characteristics of the triode section used as oscillator (see Figs. 12 and 13)

Supply voltage	V_b	= 250	250	V
Resistor in anode circuit	R_a	= 33	33	kΩ
Grid leak	R_{gT+g3}	= 47	22	kΩ
Grid current	I_{gT+g3}	= 200	350	μA
Anode current	I_a	= 4.8	5.1	mA
Oscillator voltage	V_{osc}	= 8	8	V_{RMS}
Effective slope	S_{eff}	= 0.55	0.6	mA/V

Operating characteristics of the ECH 42 used as phase inverter (see Fig. 4)

Supply voltage	V_b	= 250	350	V
Total current	I_b	= 3.6	5.1	mA
Amplification	V_o/V_i	= 11	11	
Distortion at output voltage of 5 V_{RMS}	d	= 1.2	1.1	%
Distortion at output voltage of 10 V_{RMS}	d	= 1.4	1.2	%
Distortion at output voltage of 15 V_{RMS}	d	= 1.7	1.4	%

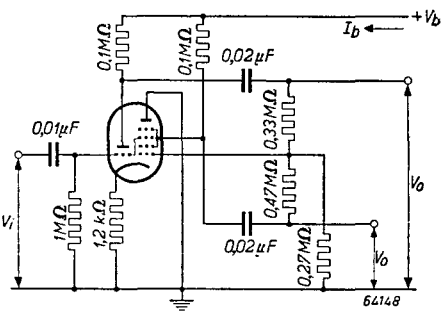

Fig. 4
Circuit diagram showing the ECH 42 used as phase inverter

ECH 42

Operating characteristics of the hexode section used as mixer; screen grids of the ECH 42 and I.F. amplifying valve EAF 42 fed by means of a common potentiometer (see Figs. 16 and 17).

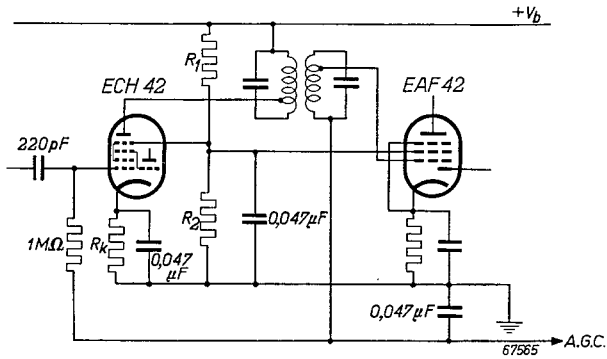

Fig. 5

Anode and supply voltage . .	$V_a = V_b$	=		250	V
Potentiometer for screen grid voltage	R_1	=		22	kΩ
	R_2	=		27	kΩ
Biasing resistor	R_k	=		180	Ω
Oscillator grid leak	R_{gT+g3}	=		22[1])	kΩ
Oscillator grid current . . .	I_{gT+g3}	=		350[1])	µA
Grid bias	V_{g1}	=	—2	—20.5	V
Screen grid voltage.	V_{g2+g4}	=	85	135	V
Anode current	I_a	=	3.0	—	mA
Screen grid current	I_{g2+g4}	=	3.0	—	mA
Conversion conductance . . .	S_c	=	750	24	µA/V
Internal resistance	R_i	=	1.7	>5	MΩ
Equivalent noise resistance	R_{eq}	=	100	—	kΩ

[1]) If the oscillator grid leak is 47 kΩ, the recommended oscillator grid current is 200 µA. The operating conditions of the valve are not affected.

Operating characteristics of the hexode section used as mixer; (screen grid voltage derived from the same potentiometer as that for the I.F. amplifier EF 41 (see Figs. 18 and 19)

Anode and supply voltage	$V_a = V_b$	=	250		V
Potentiometer for screen grid voltage	R_1	=	22		kΩ
	R_2	=	27		kΩ
Biasing resistor	R_k	=	180		Ω
Oscillator grid leak	R_{gT+g3}	=	22[1])		kΩ
Oscillator grid current	I_{gT+g3}	=	350[1])		μA
Grid bias	V_{g1}	=	—2	—22	V
Screen grid voltage	V_{g2+g4}	=	85	135	V
Anode current	I_a	=	3.0	—	mA
Screen grid current	I_{g2+g4}	=	3.0	—	mA
Conversion conductance	S_c	=	750	20	μA/V
Internal resistance	R_i	=	1.7	>5	MΩ
Equivalent noise resistance	R_{eq}	=	100	—	kΩ

Limiting values of the hexode section

Anode voltage, valve biased to cut-off	V_{a_0}	=	max.	550	V
Anode voltage	V_a	=	max.	300	V
Anode dissipation	W_a	=	max.	1.5	W
Screen grid voltage, valve biased to cut-off	$V(_{g2+g4})_0$	=	max.	550	V
Screen grid voltage with control applied to valve	$V_{g2+g4}(I_a<1\text{mA})$	=	max.	300	V
Screen grid voltage with no control applied	$V_{g2+g4}(I_a=3\text{mA})$	=	max.	125	V
Screen grid dissipation	W_{g2+g4}	=	max.	0.3	W
Grid current starting point	$V_{g1}(I_{g1}=+0.3\mu\text{A})$	=	max.	—1.3	V
Cathode current	I_k	=	max.	10	mA
External resistance between first grid and cathode	R_{g1}	=	max.	3	MΩ[2])
External resistance between third grid and cathode	R_{g3}	=	max.	3	MΩ
External resistance between cathode and heater	R_{fk}	=	max.	20	kΩ
Voltage between cathode and heater	V_{fk}	=	max.	100	V

[1]) See footnote page 80.
[2]) This value is applicable when automatic grid bias is employed.

ECH 42

Limiting values of the triode section

Anode voltage, valve biased to cut-off	V_{a_o}	= max.	550	V
Anode voltage	V_a	= max.	175	V
Anode dissipation	W_a	= max.	0.8	W
Grid current starting point . .	$V_g(I_g = +0.3\mu A)$	= max.	—1.3	V
Cathode current	I_k	= max.	6	mA
External resistance between grid and cathode	R_g	= max.	3	MΩ
External resistance between cathode and heater. . . .	R_{fk}	= max.	20	kΩ
Voltage between cathode and heater	V_{fk}	= max.	100	V

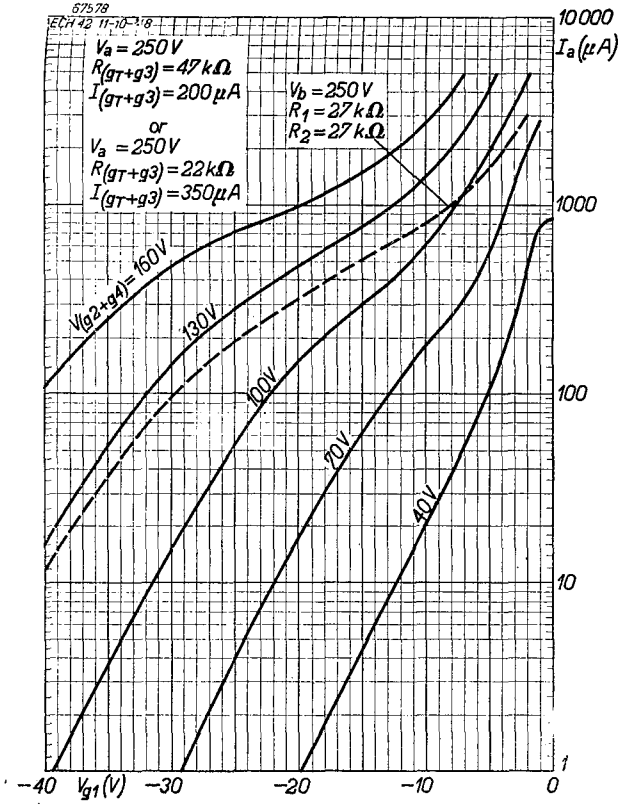

Fig. 6

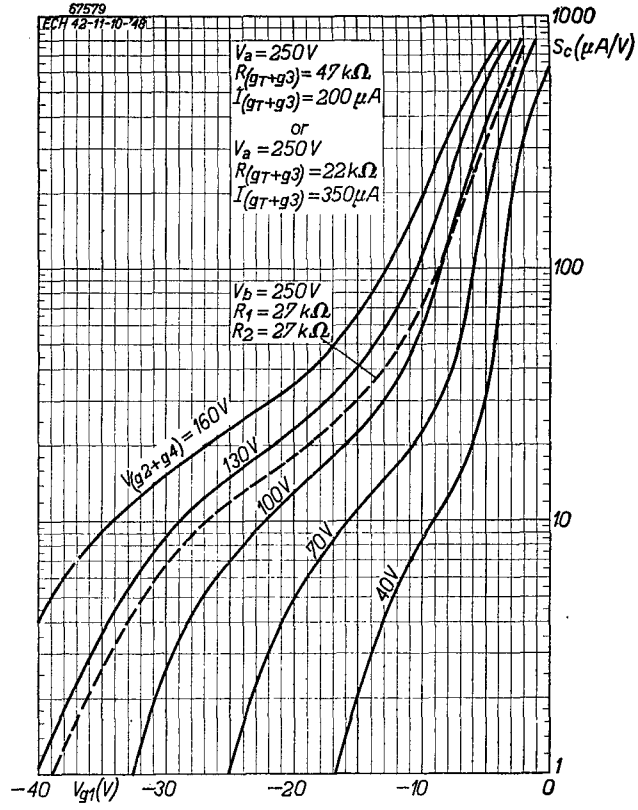

Fig. 7

Anode current (I_a, Fig. 6) and conversion conductance (S_c, Fig. 7) of the hexode section, as functions of the grid bias ($-V_{g1}$) with screen grid voltage (V_{g2+g4}) as parameter. The dotted lines indicate the anode current and conversion conductance when the screen grid voltage is derived from a potentiometer R_1, R_2 (see Fig. 3).

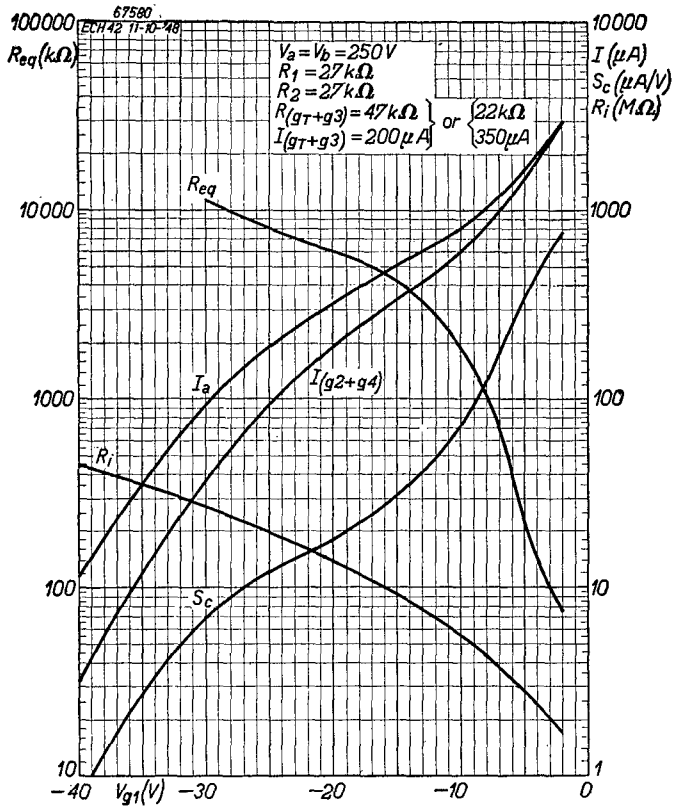

Fig. 8
Anode current (I_a), screen grid current (I_{g2+g4}), conversion conductance (S_c), internal resistance (R_i) and equivalent noise resistance (R_{eq}) as functions of the grid bias (V_{g1}). Measured in the circuit shown in Fig. 3.

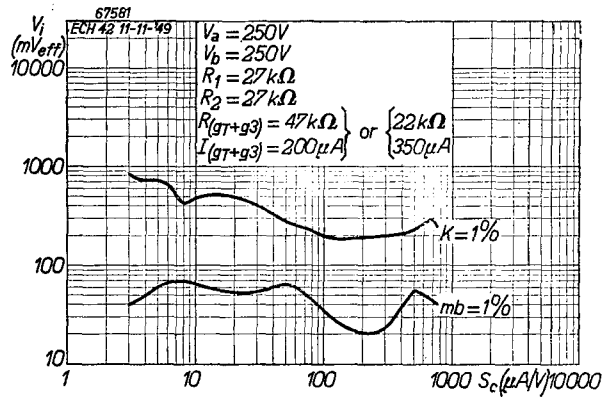

Fig. 9
1) The strength of an interfering signal on the control grid (V_i) producing 1% cross modulation (curve $K = 1\%$), and
2) the strength of a hum signal on the control grid (V_i) producing 1% hum modulation (curve $m_b = 1\%$), both as functions of the conversion conductance (S_c). Measured in the circuit shown in Fig. 3.

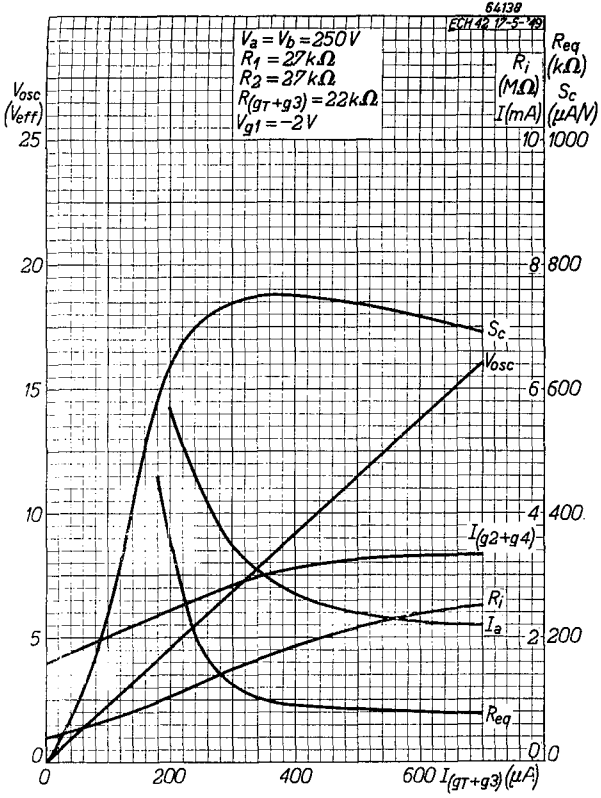

Fig. 10

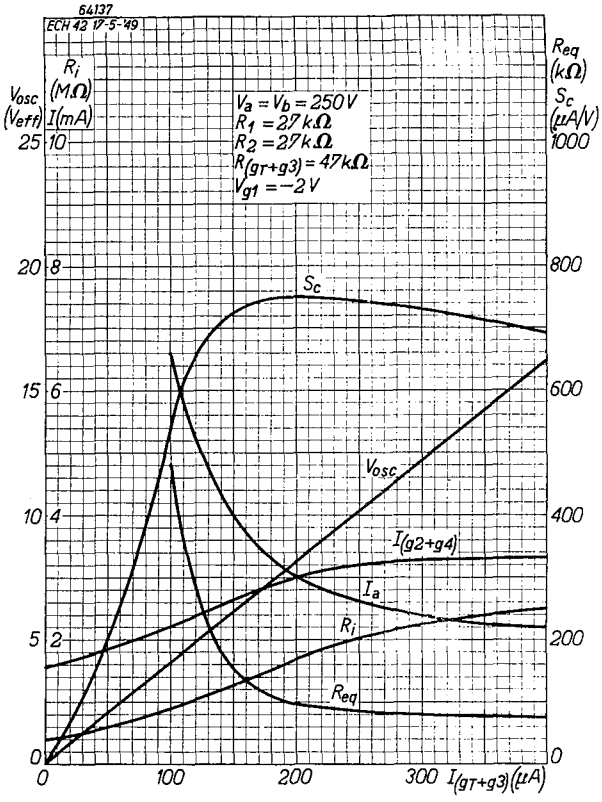

Fig. 11

Anode current (I_a), screen grid current (I_{g2+g4}), oscillator voltage (V_{osc}), conversion conductance (S_c), internal resistance (R_i) and equivalent noise resistance (R_{eq}) as functions of the oscillator grid current.

Fig. 10 : Oscillator grid leak $R_{gT+g3} = 22$ kΩ.

Fig. 11 : Oscillator grid leak $R_{gT+g3} = 47$ kΩ.

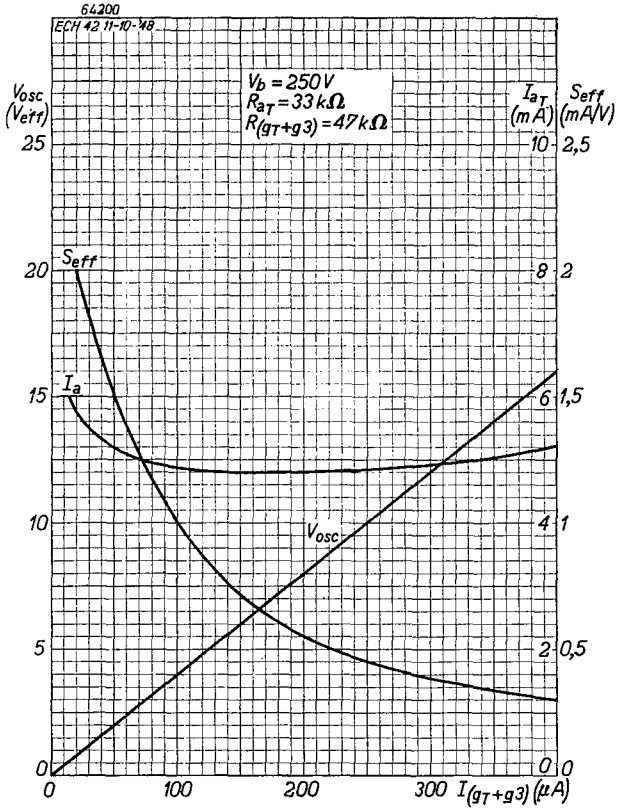

Fig. 12

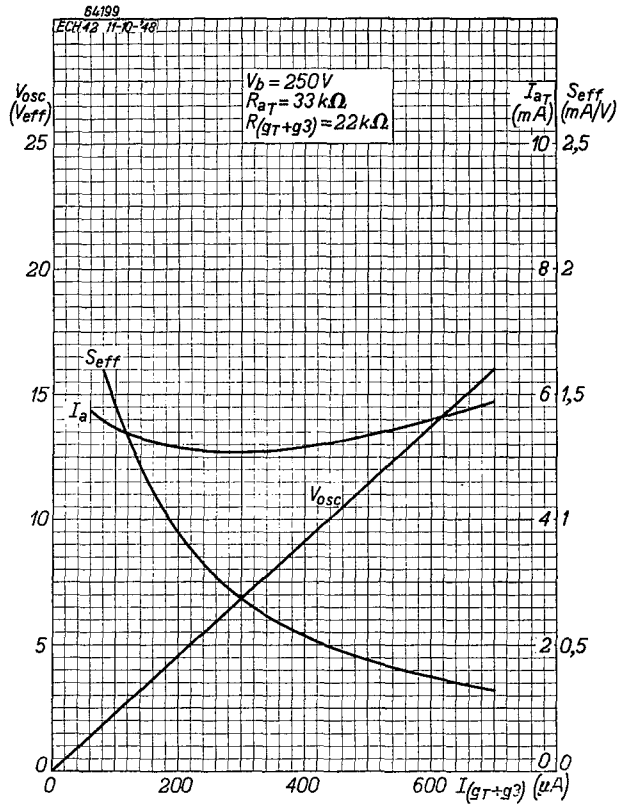

Fig. 13

Triode system : anode current (I_{aT}), oscillator voltage (V_{osc}) and effective slope (S_{eff}) as functions of the oscillator grid current (I_{gT+g3}).
Fig. 12 : Oscillator grid leak $R_{gT+g3} = 47$ kΩ.
Fig. 13 : Oscillator grid leak $R_{gT+g3} = 22$ kΩ.

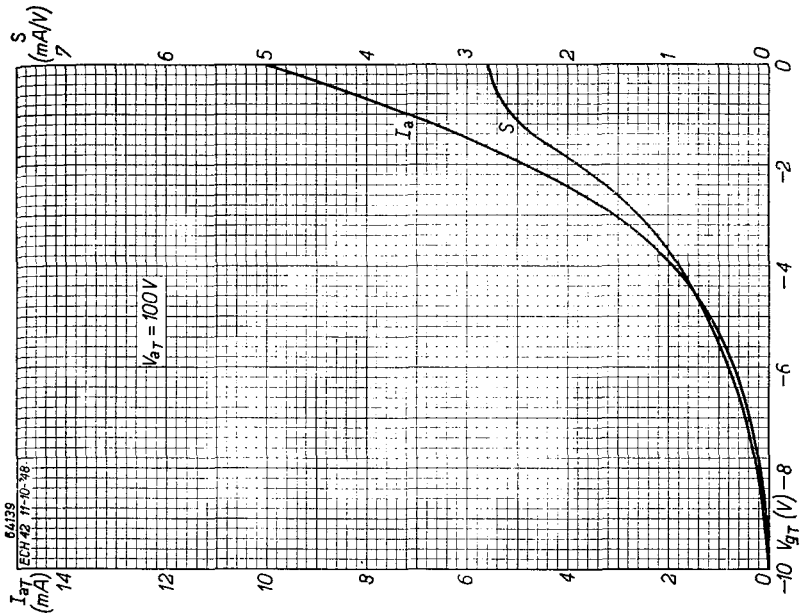

Fig. 14
Anode current (I_a) and slope (S) of the triode system as functions of the grid bias (V_{gT}). Measurements taken from non-oscillating valve at an anode voltage (V_{aT}) of 100 V.

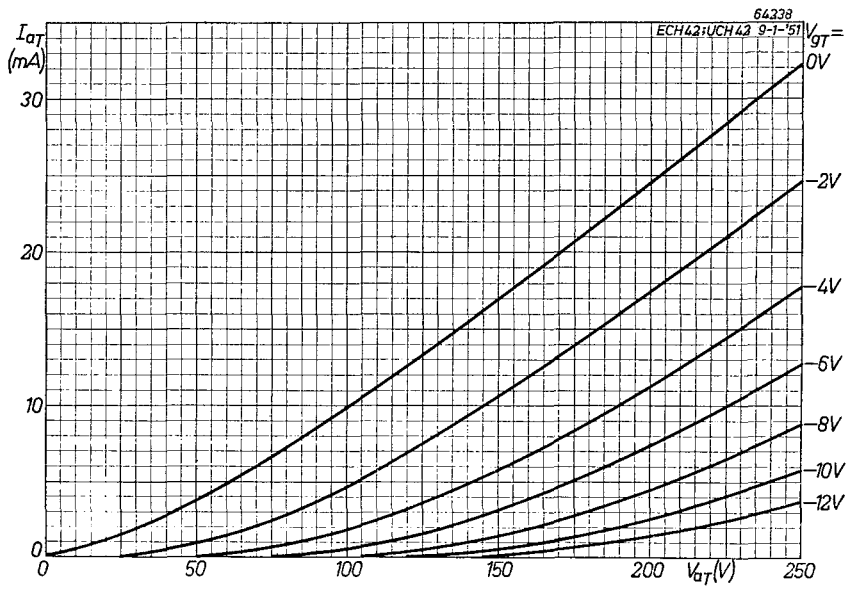

Fig. 15
I_a/V_a characteristics of the triode section of the ECH 42: static measurements.

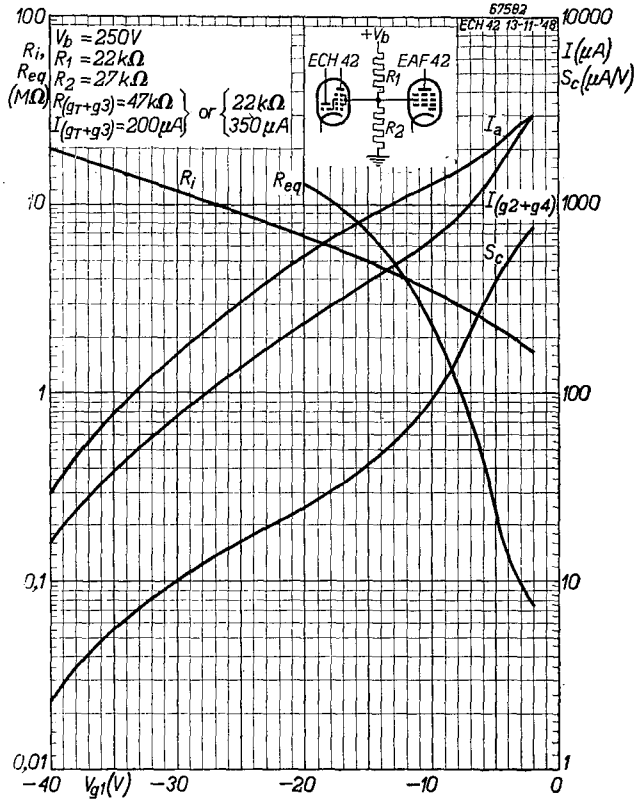

Fig. 16
As Fig. 8, but with screen grid voltage of the ECH 42 and I.F. amplifying valve EAF 42 derived from a common potentiometer R_1, R_2.

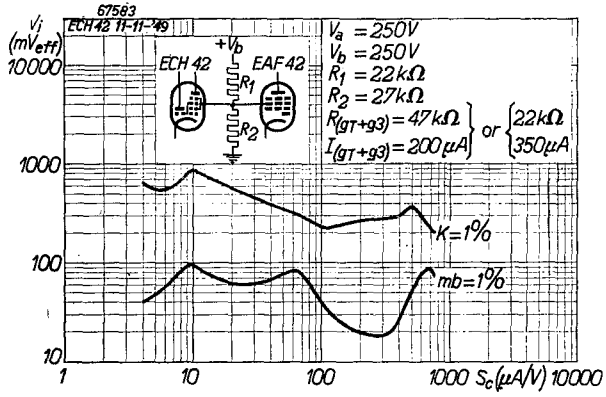

Fig. 17

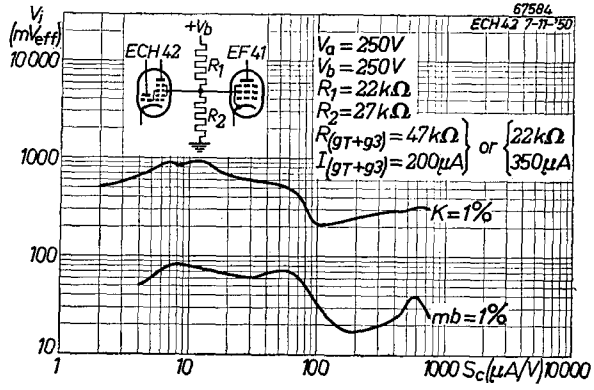

Fig. 18
As Fig. 9, but with screen grid voltage of the ECH 42 and I.F. amplifying valve supplied by means of a common potentiometer R_1, R_2.
Fig. 17 : I.F. amplifier EAF 42.
Fig. 18 : I.F. amplifier EF 41.

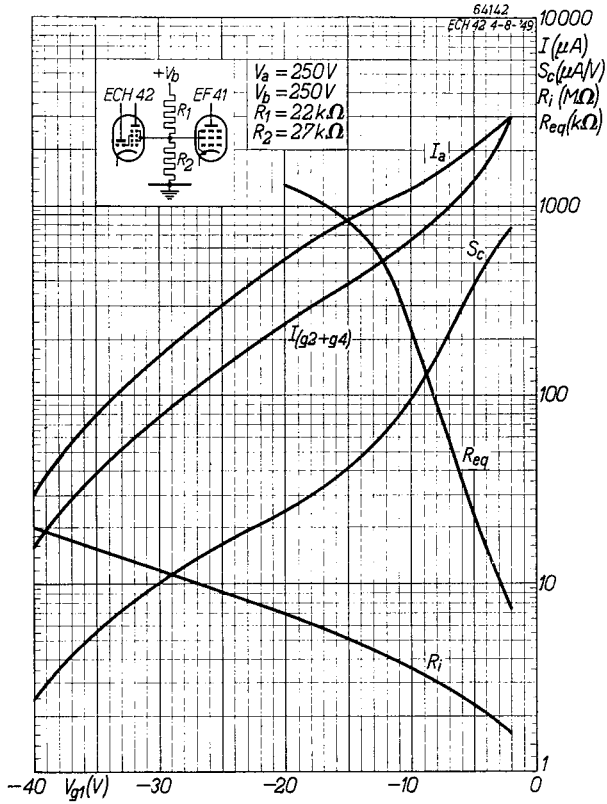

Fig. 19
As Fig. 8, but with screen grid voltage of the ECH 42 and that of the EF 41 obtained by means of a common potentiometer.