Mullard
OSCILLOGRAPH TUBE

E42-G6/B6

CATHODE RAY TUBES FOR OSCILLOGRAPHIC USE

6 - Inch Screen

Heater	Vf	=	4.0	V
	If	=	1.0	A
Capacities	Cg	=	12	uuF
	CD1D1'	=	6	uuF
	CD2D2'	=	7	uuF

Fluorescent Colour - Green (G6) Blue (B6)

Deflection - Double electrostatic for symmetrical operation.

→Operating Conditions

Va2	1000	2000	V
Va1 (approx.)	200	400	V
-Vg*	0-35	0-35	V
N1	0.54	0.27	mm/V
N2	0.40	0.20	mm/V

*The Grid Voltage should be adjusted to give the required light intensity. The voltage should never become positive or damage to the tube will result.

Limiting Values

Va2 max	2000	V
Va1 max	600	V
Max. writing speed	0.5	km/sec

E42-G6/B6

Mullard
OSCILLOGRAPH TUBE

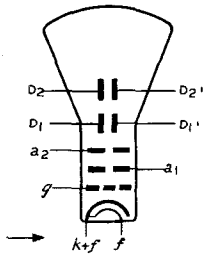

FIG 1

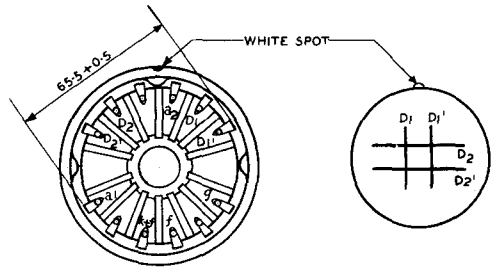

FIG 2

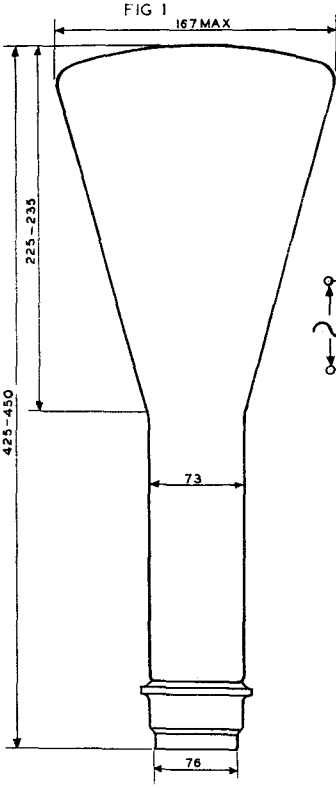

FIG 3

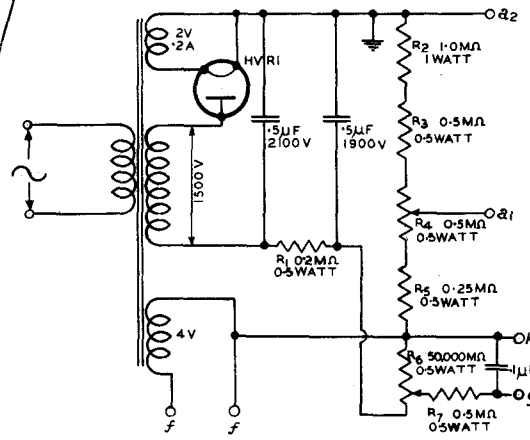

FIG 4

DIMENSIONS IN M/M
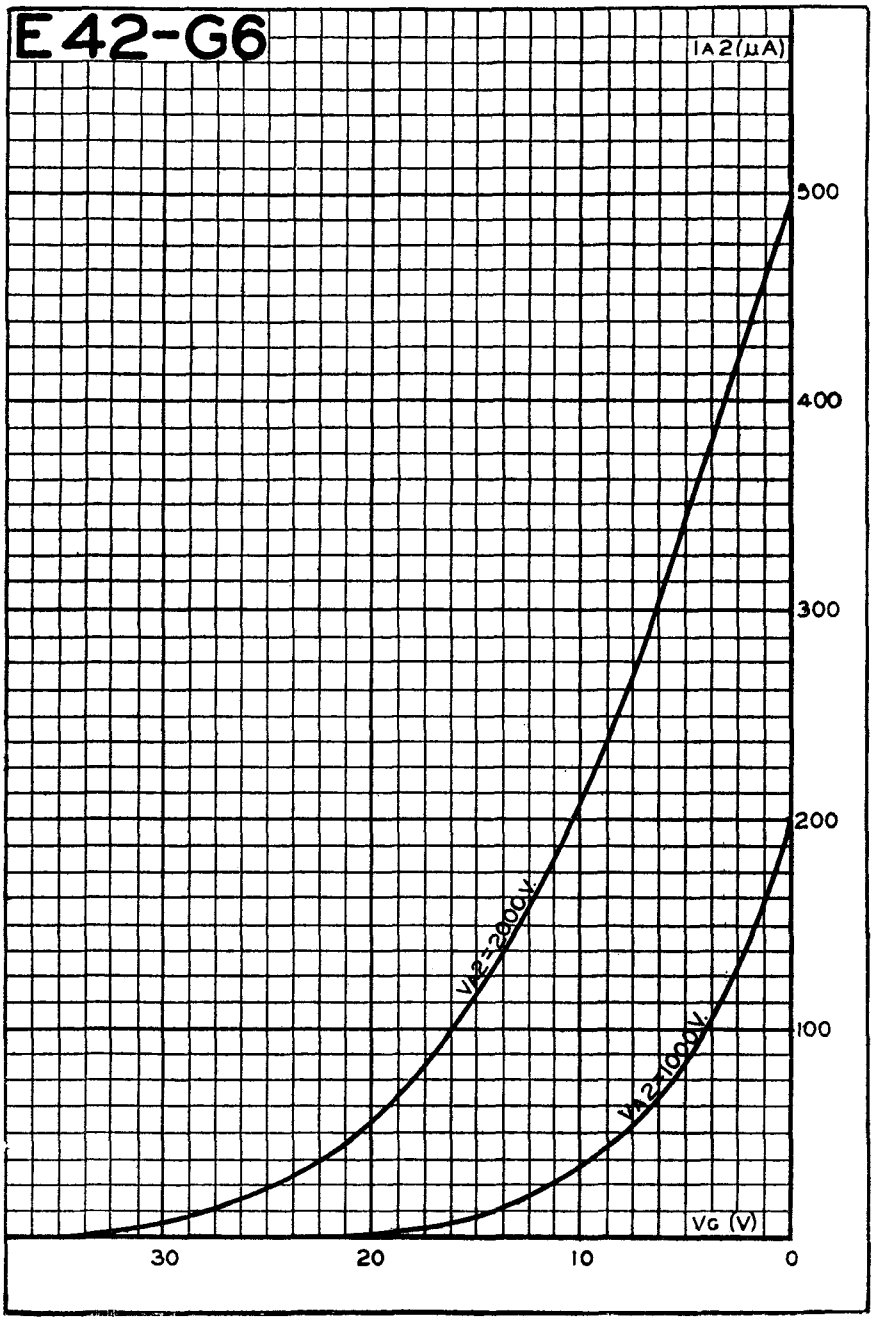
Mullard OSCILLOGRAPH TUBE E42-G6 & E42-B6