PHILIPS

DB10-78
DH10-78
DN10-78
DP10-78

CATHODE RAY TUBE for oscilloscopes with flat face and post-deflection acceleration by means of a helical electrode

SCREEN

For screen properties please refer to front of this section

Useful screen diameter 90 mm

HEATING

Indirect by A.C. or D.C., parallel supply

Heater voltage V_f = 6.3 V
Heater current I_f = 0.3 A

Dimensions in mm

Base: DIHEPTAL 12 p.

Net weight 660 g

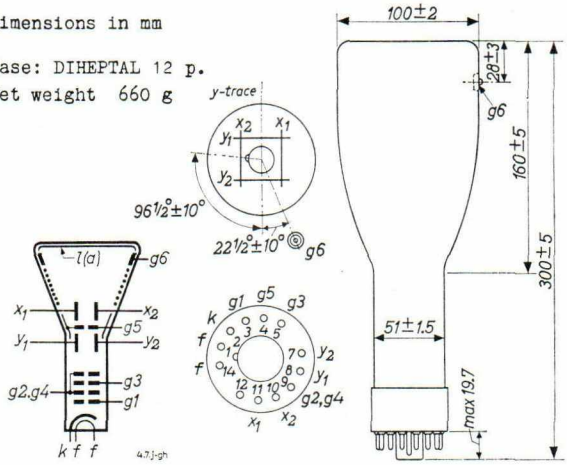

The post-deflection acceleration helix is connected between g_6 and the isolation shield g_5
The resistance of the helix is min. 50 MΩ

CAPACITANCES

Grid No.1 to all other electrodes	C_{g_1}	= 5.0 pF
Cathode to all other electrodes	C_k	= 3.4 pF
x_1 plate to all other electrodes except x_2 plate	C_{x_1}	= 4.0 pF
x_2 plate to all other electrodes except x_1 plate	C_{x_2}	= 4.0 pF
y_1 plate to all other electrodes except y_2 plate	C_{y_1}	= 3.5 pF
y_2 plate to all other electrodes except y_1 plate	C_{y_2}	= 3.5 pF
x_1 plate to x_2 plate	$C_{x_1-x_2}$	= 2.1 pF
y_1 plate to y_2 plate	$C_{y_1-y_2}$	= 1.7 pF

FOCUSING Electrostatic

For optimum sharpness it may be desirable to apply a small potential difference (max. ± 5 % of the grids No. 2 and 4 voltage $V_{g2,g4}$) between the y plates and the grids No.2 and 4 by varying the grids No.2 and 4 voltage $V_{g2,g4}$

DEFLECTION Double electrostatic

Both x and y plates for symmetrical operation

Angle between x and y traces $90^o \pm 1^o$

In general the isolation shield voltage V_{g5} and the average voltage of the deflection plates should be equal. Variation of V_{g5} (max. ± 10 % of $V_{g2,g4}$) serves to correct pincushion and barrel pattern distortion

LINE WIDTH measured on a circle of 50 mm diameter

Post accelerator voltage	V_{g6}	=	2000 V	4000 V	4000 V
Grids No.2 and 4 voltage	$V_{g2,g4}$	=	2000 V	2000 V	1000 V
Beam current	I_ℓ	=	0.5 μA	0.5 μA	0.5 μA
Line width	l.w.	=	0.45 mm	0.35 mm	0.45 mm

UNDEFLECTED SPOT POSITION. With the tube shielded the spot will be within a circle of 5 mm radius, the circle being centred with respect to the tube face

OPERATING CHARACTERISTICS

V_{g6}	=	2000	4000	4000	V
V_{g5}	=	2000 ± 200	2000 ± 200	1000 ± 100	V
$V_{g2,g4}$	=	2000 ± 100	2000 ± 100	1000 ± 50	V
V_{g3}	=	300 to 700	300 to 700	150 to 350	V
$-V_{g1}$	=	45 to 75	45 to 75	22.5 to 37.5	V[1])
M_x	=	35 to 47	41 to 55	29 to 39	V/cm
M_y	=	15 to 20	16.3 to 21.7	9.4 to 12.6	V/cm

Deviation of linearity of deflection. The sensitivity of each plate pair at a deflection of less than 75 % of the useful scan will not differ from the sensitivity at a deflection of 25 % of the useful scan by more than 2 %

Pattern distortion. With a raster pattern the size of which is adjusted so that the widest points of the pattern just touch the sides of a square of 51 mm sides, no points of the pattern sides will be within a concentric square of 49 mm sides.

LIMITING VALUES (Design centre values)

Post accelerator voltage	V_{g6}	= max.	8000 V
		= min.	1500 V
Isolation shield voltage	V_{g5}	= max.	2200 V
Accelerator voltage	$V_{g2,g4}$	= max.	2100 V
		= min.	1000 V
Voltage ratio	$V_{g6}/V_{g2,g4}$	= max.	4
Focusing voltage	V_{g3}	= max.	1500 V
Grid. No.1 voltage			
Negative value	$-V_{g1}$	= max.	200 V
Positive value	$+V_{g1}$	= max.	0 V
Peak positive value	$+V_{g1\ p}$	= max.	2 V
Peak voltage between grids No.2 and 4 and any deflection plate	$V_{x-g2,g4\ p}$	= max.	500 V
	$V_{y-g2,g4\ p}$	= max.	500 V
Voltage between cathode and heater	V_{kf}	= max.	180 V
Grids No.2 and 4 dissipation	$W_{g2,g4}$	= max.	6 W
Screen dissipation	W_{ℓ}	= max.	3 mW/cm^2

[1]) For visual extinction of focused spot

→ CIRCUIT DESIGN VALUES

Focusing voltage	V_{g3} = 150-350 V	per kV of $V_{g2,g4}$
Negative grid No. 1 voltage for visual extinction of focused spot	$-V_{g1}$ = 22.5-37.5 V	
Deflection factors		
$V_{g6}/V_{g2,g4} = 1$	M_x = 17.5-23.5 V/cm M_y = 7.5-10 V/cm	
$V_{g6}/V_{g2,g4} = 2$	M_x = 20.5-27.5 V/cm M_y = 8.15-10.85 V/cm	
$V_{g6}/V_{g2,g4} = 4$	M_x = 29-39 V/cm M_y = 9.4-12.6 V/cm	

Grid No.1 circuit resistance	R_{g1} = max. 1.5 MΩ
Deflection plate resistance	$R_x = R_y$ = max. 1 MΩ
Grid No.3 current	I_{g3} = -30 to +15 μA

PHILIPS

DB10-78
DH10-78
DN10-78
DP10-78

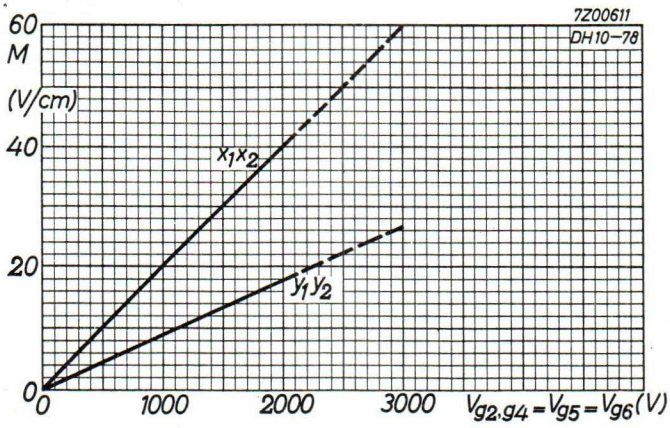

M = Deflection factor

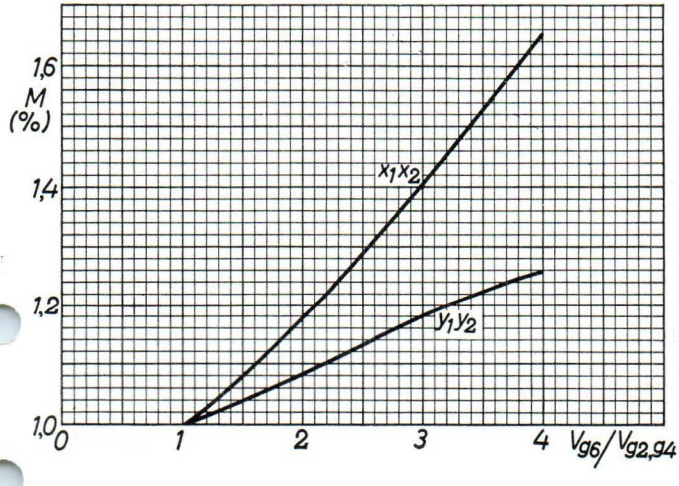

3.3.1963

A

DB10-78
DH10-78
DN10-78
DP10-78

PHILIPS

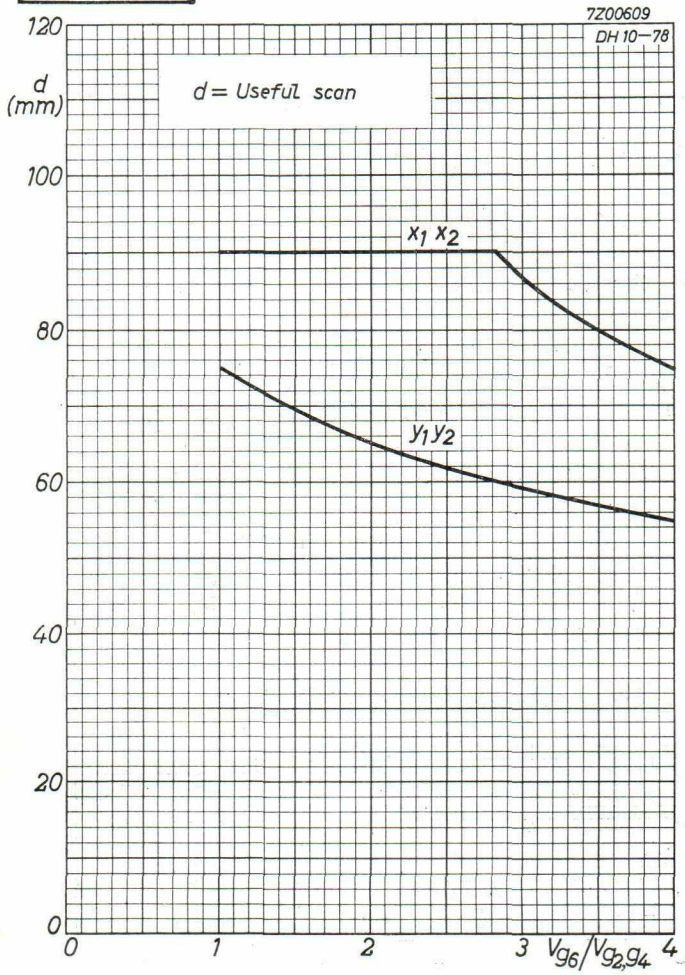

B