PHILIPS ELECTRON TUBES AND SEMI CONDUCTORS

Information Release

PHILIPS ELECTRON TUBE DIVISION

Dear Sirs,

We have pleasure in announcing herewith the cathode-ray tube type DG 13-32, which has been incorporated in our programme to suit the requirements for 13 cm tubes for service oscilloscopes and the like.

The cathode-ray tube DG 13-32 is equivalent to the American type 5UP1 and combines a great deflection sensitivity, a small line width and high brilliancy.

We remain,

Very truly yours,

PHILIPS

DG 13-32

GENERAL-PURPOSE CATHODE-RAY TUBE

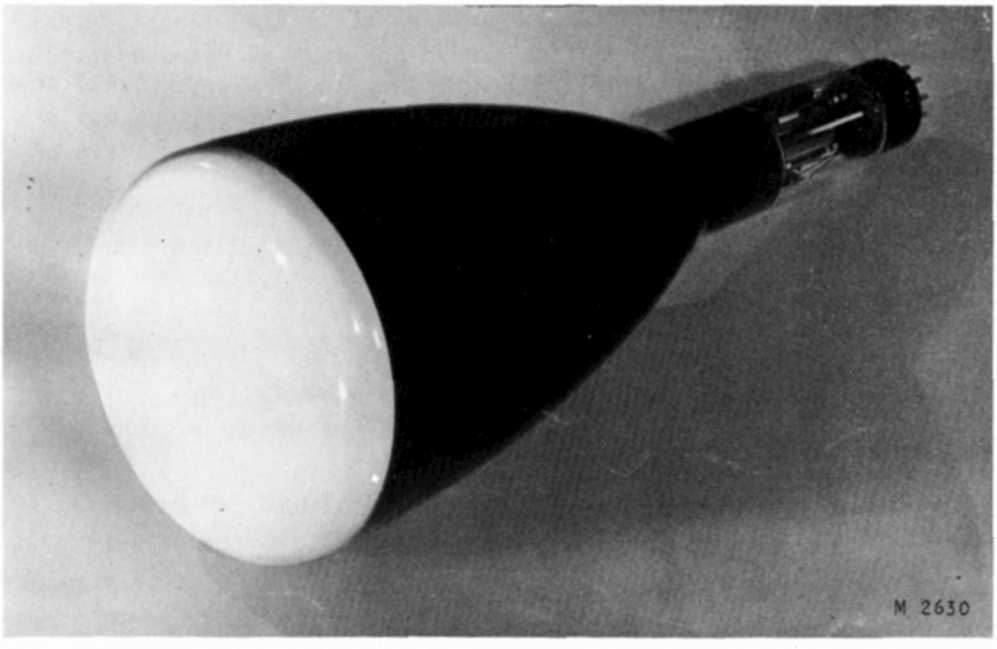

The Philips Cathode-Ray Tube DG 13-32 is especially designed to satisfy the requirements for visual observation of oscillographic phenomena.

The characteristic features of the tube are:

- double symmetric electrostatic deflection;
- high deflection sensitivity at full scan;
- brilliant and fine spot at operation beam-current;
- 4 watt cathode adapted to existing circuitry technique;
- equivalent to the Cathode-Ray Tube 5 UP 1.

ELECTRICAL DATA

HEATING

Indirect by a.c. or d.c.

Parallel supply

Heater voltage	6.3 V
Heater current	0.6 A

SCREEN

Fluorescence	green
Persistence	medium

FOCUSING

Electrostatic

DEFLECTION

Double electrostatic $D_1 D_1'$ symmetric, $D_2 D_2'$ symmetric

DIRECT INTERELECTRODE CAPACITANCES

Grid No.1 to all other electrodes	C_{g_1}	=	4.3 pF	
Cathode to all other electrodes	C_k	=	6.5 pF	
D_1 to all other electrodes	C_{D_1}	=	4.6 pF	1)
D_1' to all other electrodes	$C_{D_1'}$	=	4.6 pF	1)
D_2 to all other electrodes	C_{D_2}	=	9.3 pF	1)
D_2' to all other electrodes	$C_{D_2'}$	=	5. pF	1)
D_1 to D_1'	$C_{D_1 D_1'}$	=	1.5 pF	
D_2 to D_2'	$C_{D_2 D_2'}$	=	2 pF	

LINE WIDTH at

Grid No.2 + 4 voltage $V_{(g_2 + g_4)}$ = 2000 V

Screen current I_1 = 0.5 μA — 0.4 mm [2]

MAXIMUM DIMENSIONS (in mm) AND ELECTRODE CONNECTIONS

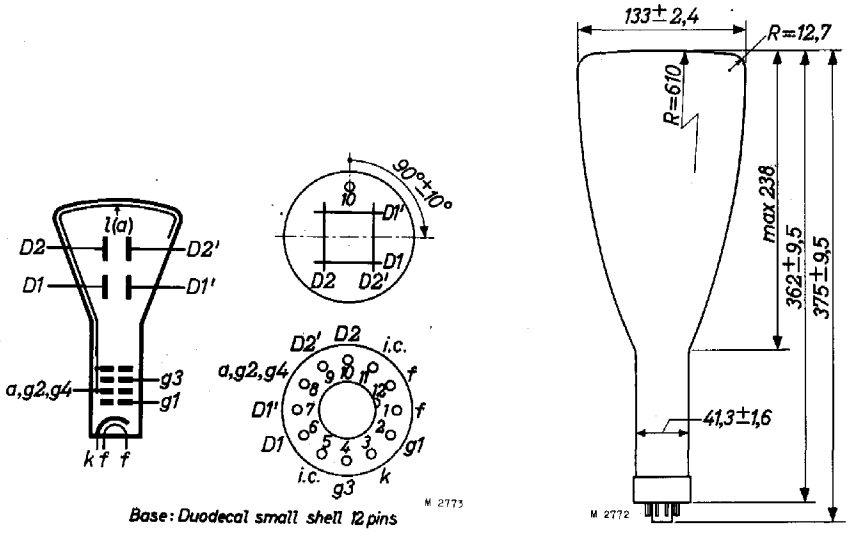

[1]) To all electrodes, except the opposite deflection plate.

[2]) Measured on a circle of 50 mm diameter.

TYPICAL OPERATING CONDITIONS

Grid No.2 and 4 voltage	$V_{g_2+g_4}$	=	2000 V	
Grid No.3 voltage	V_{g_3}	=	340 - 640 V	[3]
Neg. grid No.1 voltage for visual extinction of the focused spot	$-V_{g_1}$	=	max. 90 V	
Sensitivity (D_1D_1')	N_1	=	0.41 - 0.55 mm/V	
Sensitivity (D_2D_2')	N_2	=	0.33 - 0.45 mm/V	

LIMITING VALUES (Design centre value)

Grid No.2 and 4 voltage	$V_{g_2+g_4}$	=	max. 2500 V	
Grid No.3 voltage	V_{g_3}	=	max. 1000 V	[3]
Grid No.1 voltage Negative value	$-V_{g_1}$	=	max. 200 V	
Positive value	V_{g_1}	=	max. 0 V	
Peak voltage on deflection plates D_1D_1'	$V_{D_1D_1'p}$	=	max. 500 V	
Peak voltage on deflection plates D_2D_2'	$V_{D_2D_2'p}$	=	max. 500 V	
Voltage between cathode and heater	V_{kf}	=	max. 125 V	
Screen dissipation	W_l	=	max. 3 mW/cm²	
Grid No.2 and 4 dissipation	$W_{g_2+g_4}$	=	max. 4 W	

MAX. CIRCUIT VALUES

Deflection plate resistance	R_D	=	max. 5 MΩ	
Grid No.1 circuit resistance	R_{g_1}	=	max. 1.5 MΩ	

MECHANICAL DATA

MOUNTING POSITION

Any

DIMENSIONS

Overall length 375 ± 9.5 mm (14¾ ± ⅜")

Screen diameter 13 cm (5")

NET WEIGHT

790 g (1 lb 12 oz.)

[3]) For calculation of the grid No.3 voltage potentiometer, a grid No.3 current of min. -15 µA and max. +10 µA must be taken into account.

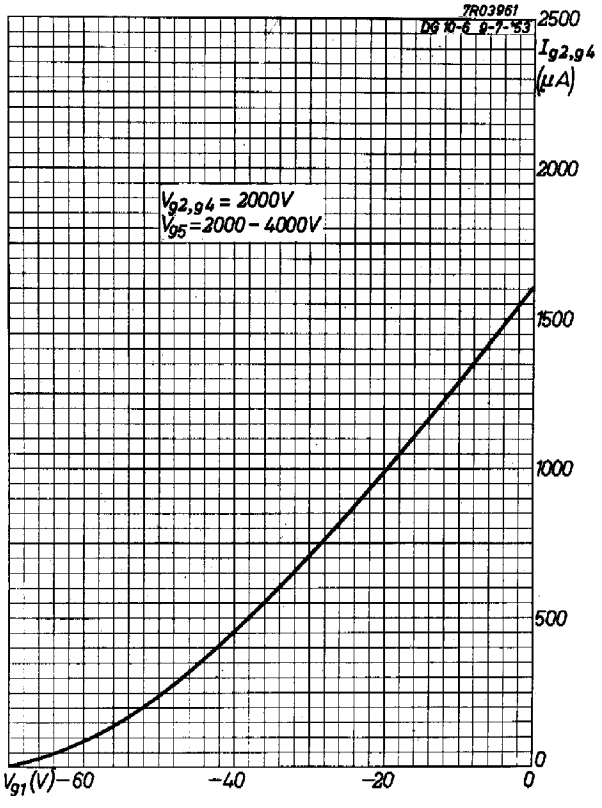

Grid No.2 and No.4 current plotted against negative grid No.1 current.

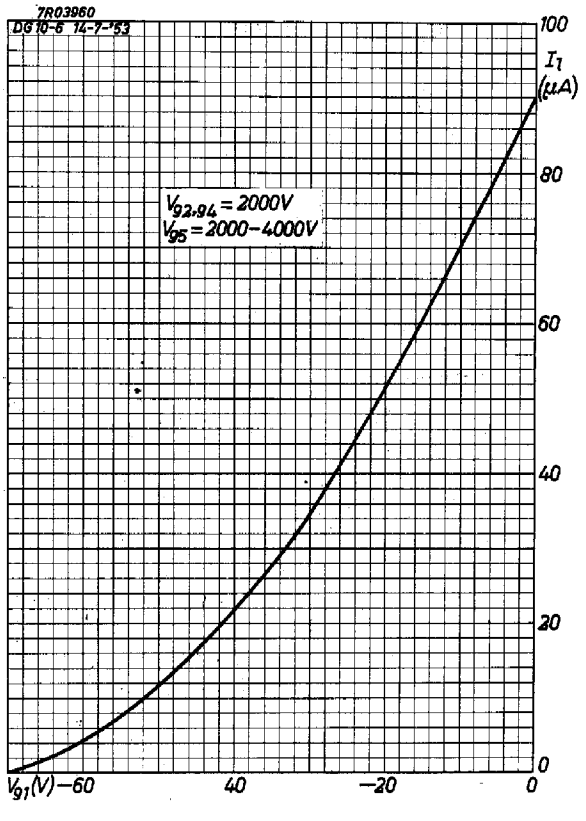

Screen current as a function of negative grid-cut-off voltage.