PHILIPS ELECTRON TUBES AND SEMI CONDUCTORS

Information Release

DG 10-78

PHILIPS ELECTRON TUBE DIVISION

Eindhoven, February 1958

Dear Sirs,

We have pleasure in introducing herewith a new type in our range of tight-tolerance oscilloscope cathode-ray tubes, viz. the DG 10-78.

Thanks to advanced engineering, the characteristics of this tube are such as to enable the user to choose from a great variety of possibilities that particular combination of operating conditions which is optimal for a given application.

The envelope of the DG 10-78 has a flat face-plate of 10 cm (4") in diameter, which on the one hand ensures an inexpensive and short tube (overall-length 300 mm), and on the other an ample screen area to meet the requirements for use in various applications, ranging from simple, low-priced oscilloscopes to expensive precision apparatus.

The most interesting features of the DG 10-78 are:

1. the post-deflection acceleration, made possible by the electrode that is helically applied on the inside of the envelope, can be stepped up to a ratio 1: 4, so that high sensitivity as well as high brightness are obtainable;
2. a maximum post-deflection acceleration voltage of 8 kV;
3. a sensitivity of up to 1.15 mm/V;
4. the screening plate between both pairs of deflection plates is separately connected, which makes correction of both astigmatism and pattern distortion possible.

The excellent properties of the DG 10-78 make it a very useful element, not only in the field of radio and television service, but also in almost every branch of industry and research.

For an extensive description, reference is made to the enclosed Tentative Data sheet.

Yours faithfully,

p.p. N.V. PHILIPS' GLOEILAMPENFABRIEKEN. p.o.

J.N. Schot

H.M. Hofstede

CATHODE-RAY TUBE

WITH A HELICAL POST-ACCELERATION ELECTRODE

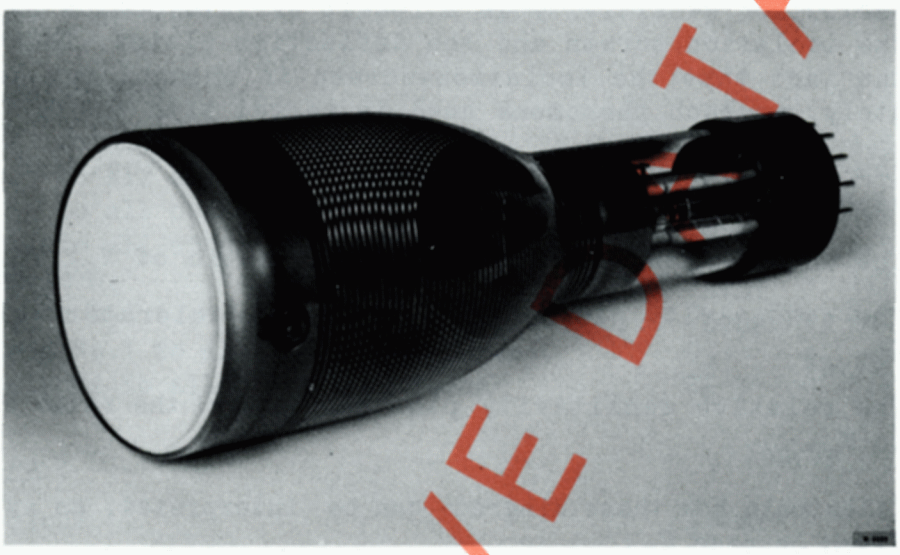

Fig.1. Photograph of the DG 10-78

TENTATIVE DATA

The DG 10-78 is a new type in our range of "tight-tolerance" cathode-ray tubes, featuring a flat faceplate with a diameter of 10 cm(4"), electrostatic focusing and highly sensitive electrostatic double-symmetric deflection.

Thanks to some special characteristics this cathode-ray tube can be used in a wide variety of applications.

1. The post-deflection acceleration electrode is formed by a high-resistance coating applied helically on the inside of the bulb. This method ensures a continuous rise of the potential and hence considerably less pattern distortion than the normal single-step post-deflection acceleration. In addition, the ratio of post-deflection voltage to grid No.2 and 4 voltage can be stepped up to four. This means that the sensitivity-determining accelerator voltage ($V_{g2,g4}$) can be kept low, whereas the brightness determining post-accelerator voltage (V_{g6}) can be raised to a high value, so that a combination of high deflection sensitivity and high light output is achieved.

2. The isolation-screen between the two pairs of deflection plates is brought out separately. By varying the potential of this screen possible occurrence of pin-cushion and barrel-effects can entirely be eliminated.

3. To achieve optimum performance in all circumstances it may be desirable to apply a voltage for "astigmatism" control (the difference in potential between grid No.4 and the D_1D_1' plates). For controlling astigmatism in all cases where the use of D.C. amplifiers for the D_1D_1' plates is involved, it is desirable to keep the average potential of the D_1D_1' plates constant and to vary the potential of grid No.4. If, as is normal in conventional tubes, the isolation-screen is internally connected to grid No.4, a variation of grid No.4 voltage will cause a change of deflection sensitivity as a result of interaction between the isolation-screen and the deflection plates. Thanks to the fact that the isolation-screen is brought out separately, no such phenomena need be feared with the DG 10-78.

In the present data some diagrams have been included (see pages 6 and 7), indicating respectively:

1. The useful scan plotted against the ratio of $V_{g6}/V_{g2,g4}$.
2. The sensitivity, plotted against the accelerator voltage $V_{g2,g4}$.
3. The relative sensitivity plotted against the ratio of V_{g6} to $V_{g2,g4}$.

To illustrate how these diagrams can be interpreted, an example is given on page 6.

TECHNICAL DATA OF THE DG 10-78

ELECTRICAL

Heating

Indirect by A.C. or D.C.; parallel supply

heater voltage	V_f	= 6.3 V
heater current	I_f	= 0.3 A

Capacitances

D_1 to all other electrodes	C_{D1}	= 3.5 pF[1])
D_1' to all other electrodes	$C_{D1'}$	= 3.5 pF[1])
D_2 to all other electrodes	C_{D2}	= 4.5 pF[1])
D_2' to all other electrodes	$C_{D2'}$	= 4.5 pF[1])
D_1 to D_1'	$C_{D1D1'}$	= 1.7 pF
D_2 to D_2'	$C_{D2D2'}$	= 2.1 pF
Grid No.1 to all other electrodes	C_{g1}	= 5 pF
Cathode to all other electrodes	C_k	= 3.4 pF

Screen

Colour	green
Persistence	medium
Useful screen diameter	90 mm
Useful scan for:	
Ratio $V_{g6}/V_{g2,g4} = 1$	D_1D_1' = 75 mm[2]) D_2D_2' = 90 mm
Ratio $V_{g6}/V_{g2,g4} = 2$	D_1D_1' = 65 mm[2]) D_2D_2' = 90 mm
Ratio $V_{g6}/V_{g_2,g4} = 4$	D_1D_1' = 55 mm[2]) D_2D_2' = 75 mm

Focusing electrostatic

Deflection double electrostatic D_1D_1' symmetrical, D_2D_2' symmetrical

Angle between D_1D_1' and D_2D_2' traces $90^\circ \pm 1^\circ$

---

[1]) Except the opposite deflection plate.

[2]) This useful scan can be max. 3 mm shifted with respect to the geometric centre of the faceplate.

Line width

V_{g6} = 2000 V $V_{g2,g4}$ = 2000 V I_{ℓ} = 0.5 μA		0.45 mm [3]
V_{g6} = 2000 V $V_{g2,g4}$ = 4000 V I_{ℓ} = 0.5 μA		0.35 mm [3]
V_{g6} = 1000 V $V_{g2,g4}$ = 4000 V I_{ℓ} = 0.5 μA		0.45 mm [3]

Helix resistance

Post-deflection acceleration helix resistance	min.	50 MΩ

Typical operating conditions

Post-accelerator voltage	V_{g6}	=	2000	4000	4000 V
Isolation-screen voltage	V_{g5}	=	2000	2000	1000 V [4]
Accelerator voltage	$V_{g2,g4}$	=	2000	2000	1000 V
Focusing voltage	V_{g3}	=	400-700	400-700	200-350 V [5]
Negative grid No.1 voltage	$-V_{g1}$	=	45-75	45-75	22.5-37.5 V [6]
Deflection sensitivity					
Vertical D_1D_1'			0.57-0.69	0.50-0.60	0.84-1.02 mm/V
Horizontal D_2D_2'			0.23-0.29	0.18-0.23	0.26-0.33 mm/V

Deviation of the linearity of deflection	max.	2 % [7]
Pattern distortion	<	2 % [8] [4]
Spot position (undeflected)		5 mm radius [9]

Limiting values (design centre values)

Post-accelerator voltage	V_{g6}	=	max. 8000 V min. 1500 V
Isolation-shield voltage	V_{g5}	=	max. 3000 V
Accelerator voltage	$V_{g2,g4}$	=	max. 3000 V = min. 1000 V
Ratio	$V_{g6}/V_{g2,g4}$	=	max. 4
Focusing voltage	V_{g3}	=	max. 1500 V

[3]) Measured on a circle of 50 mm diameter.

[4]) [5]) [6]) [7]) [8]) [9]) See page 6.

Grid No.1 voltage			
negative value	$-V_{g1}$	= max.	200 V
positive value	$+V_{g1}$	= max.	0 V
positive peak value	$+V_{g1p}$	= max.	2 V
Peak voltage between accelerator and any deflection plate	$V_{D-(g2,g4)p}$	= max.	500 V
Voltage between cathode and heater	V_{kf}	= max.	180 V
Grid No.2 and 4 dissipation	W_{g2+g4}	= max.	6 W
Screen dissipation	W_{ℓ}	= max.	3 mW/cm²

Circuit design values

Focusing voltage	V_{g3}	=	200 - 350 V [10]
Negative grid No.1 voltage	$-V_{g1}$	=	22.5-37.5 V [10]
Deflection factor for:			
Ratio $V_{g6}/V_{g2,g4}$ = 1	D_1D_1'	=	0.72-0.89 V/mm
	D_2D_2'	=	1.72-2.17 V/mm [10]
Ratio $V_{g6}/V_{g2,g4}$ = 2	D_1D_1'	=	0.83-1.00 V/mm
	D_2D_2'	=	2.17-2.78 V/mm [10]
Ratio $V_{g6}/V_{g2,g4}$ = 4	D_1D_1'	=	0.98-1.19 V/mm
	D_2D_2'	=	3.03-3.85 V/mm [10]
Grid No.1 circuit resistance	R_{g1}	=	1.5 MΩ
Deflection plate resistance	R_D	=	5 MΩ
Grid No.3 current	I_{g3}	=	-30/+15 μA

MECHANICAL DATA

Mounting position	Any
Net weight approx.	660 g (1 lbs 7.2 oz)
Base	Diheptal

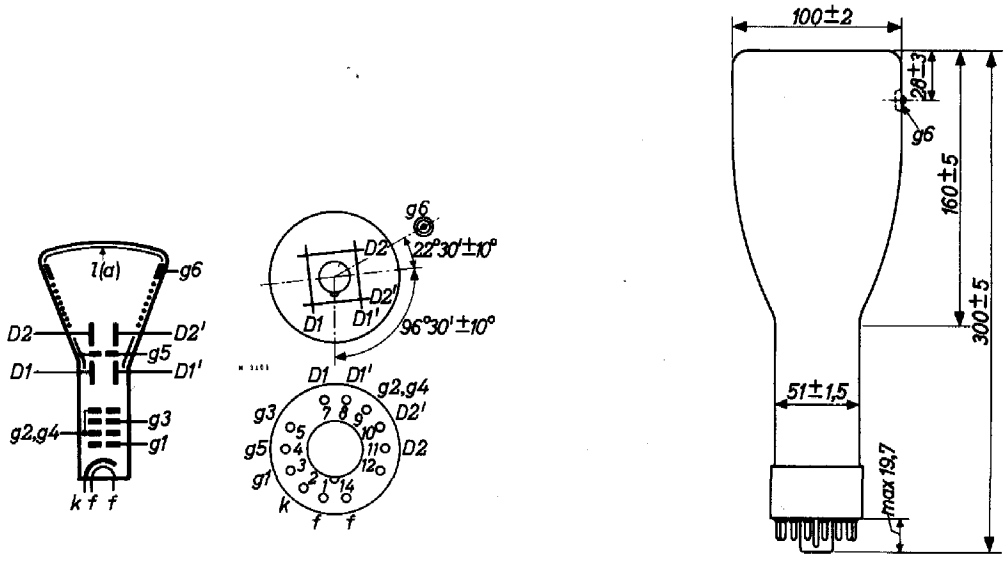

Fig.2. Dimensional outline (in mm) and electrode connections of the DG 10-78.

[10]) Per kV of the accelerator voltage $V_{g2,g4}$.

EXAMPLE

If it is assumed that a tube must be used at a post-accelerator voltage (V_{g6}) of 2600 V and an accelerator voltage ($V_{g2,g4}$) of 1100 V,

from Fig.3 can be seen that for the ratio

$$V_{g6}/V_{g2,g4} = 2.36 \ (2600/1100),$$

the useful scan for

$$D_1D_1' = 63 \text{ mm}$$
$$\text{and} \quad D_2D_2' = 90 \text{ mm};$$

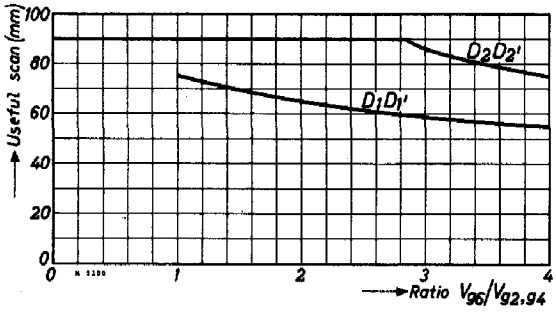

Fig.3. Useful scan plotted against the ratio $V_{g6}/V_{g2,g4}$

Notes from page 4.

[4]) In general the isolation-screen voltage and the average potential of the deflection plates should be equal. Variation of the isolation-shield voltage (max. ± 10% of $V_{g2,g4}$) serves to correct pincushion and barrel pattern distortion. The isolation-shield is also connected to the lower end of the post-accelerator helix.

[5]) In general the average potential of the deflection plates and grid 2 and 4 should be equal. For optimum sharpness it may be desirable to apply a small potential difference (max. ± 5% of $V_{g2,g4}$) between the D_1D_1' plates and grid No.2 and 4.

[6]) For visual extinction of the focused spot.

[7]) The sensitivity (for both D_1D_1' and D_2D_2' plate pairs separatively) for a deflection of less than 75% of the useful scan will not differ from the sensitivity for a deflection at 25% of the useful scan by more than the indicated value.

[8]) With a raster pattern the size of which is adjusted so that the widest points of the pattern just touch the sides of a square 51 mm on a side, no point of these pattern sides will be within an inscribed square of 49 mm on a side.

[9]) With the tube shielded the spot will be within a circle of 5 mm radius that is centred with respect to the tube face.

Fig.4 shows that for $V_{g2,g4}$ = 1100 V without post-acceleration, the sensitivity for the D_1D_1' plates = 1.15 mm/V and for the D_2D_2' plates = 0.485 mm/V;

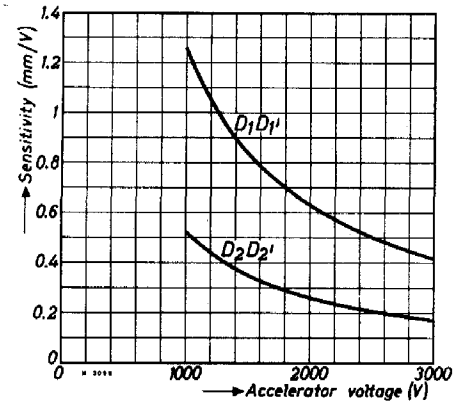

Fig.4. Sensitivity plotted against the accelerator voltage $V_{g2,g4}$.

Fig.5 shows the correction factor, which has become necessary due to the influence of the post-acceleration, on these sensitivities. For the ratio $V_{g6}/V_{g2,g4}$ = 2.36 this correction factor is 0.84 for the D_1D_1' plates and 0.73 for the D_2D_2' plates. The sensitivity with post-acceleration becomes therefore:

for D_1D_1' = 0.84 x 1.15 mm/V = 0.966 mm/V
for D_2D_2' = 0.73 x 0.485 mm/V = 0.354 mm/V

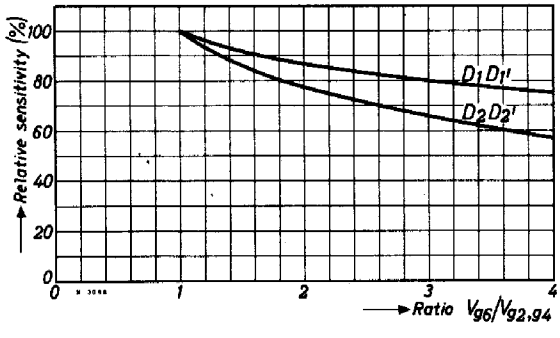

Fig.5. Relative sensitivity plotted against the ratio $V_{g6}/V_{g2,g4}$.

Summarizing, at a post-accelerator voltage of 2600 V and an accelerator voltage of 1100 V the following values can be found with reference to the diagrams from Figs. 3, 4 and 5: 7

The useful scan D_1D_1' - 63 mm
D_2D_2' - 90 mm
The sensitivity D_1D_1' - 0.966 mm/V
D_2D_2' - 0.354 mm/V