THE M-O VALVE
COMPANY LIMITED

DET24

GEC

UHF DISC SEAL TRIODE

BRIEF DATA

The DET24 is a conduction cooled UHF disc seal triode. It is a commercial equivalent of CV397.

HEATER

Heater voltage	6.3	V
Heater current (approx)	1.0	A

MAXIMUM RATINGS

DC anode voltage	400	V
DC anode current	120	mA
Peak anode current	600	mA
Anode dissipation	20	W
Grid dissipation	1	W
Negative dc grid voltage	50	V
Anode seal temperature	140	°C

CAPACITANCES

Anode to grid	2.2	pF
Anode to cathode	0.04	pF
Grid to cathode	4.8	pF

CHARACTERISTICS

DC anode voltage	400	V
DC anode current	50	mA
Mutual conductance	12	mA/V
Amplification factor	28	–

A member of the GEC Group of Companies

© 1977 The M-O Valve Co. Ltd.

December 1977
Issue 4

TYPICAL OPERATION (in coaxial oscillator as shown in fig. 4)

Frequency	500	MHz
DC anode voltage	300	V
DC anode current	100	mA
DC grid current	40	mA
Negative dc grid voltage	15	V
Load power	14	W

CIRCUIT DESIGN

The performance of the DET24 as an oscillator and an amplifier is shown in the curves of figs. 9 and 10. The circuits used to obtain this data are given in figs. 4 and 5 for the oscillator and amplifier respectively. In both cases the circuit elements consist of coaxial lines with the grid line common to input and output cavities.

The anode-grid and grid-cathode cavities are both tuned by means of movable bridges; if contact bridges are used, it is important that good contact is made with the tubes on which they slide. In order that bias may be used, a grid-cathode contact bridge must incorporate a capacitor. Both the need for this capacitor and the difficulties of reliable sliding contacts are avoided if non-contact bridges are used.

In the oscillator the position of the feedback probe depends upon the required wavelength and on the mode of operation of the tuned circuits. Probe positions are shown in fig. 4 for a wide range of wavelengths. The amount of feedback is controlled by the capacitance of the probe to the cathode line. Even when a circuit is intended to operate only at one frequency it is desirable to provide control of feedback to compensate for variations between valves.

If the circuit dimensions given in fig. 3 are used, the line lengths for several modes of operation and wavelengths are shown by the curves of fig. 8.

The performance curves for the DET24 as an amplifier are shown for two values of driving power (fig. 10). As the driving power is the power actually delivered to the amplifier, the driver stage should provide significantly greater power to allow for losses in the coupling system.

At frequencies below 500 MHz satisfactory performance may be obtained using lumped instead of distributed circuit elements. Application Report No. 10 describes an amplifier designed in this manner.

INSTALLATION

The valve may be mounted in any position but rigid connection must be made to the anode flange only.

The rate of rise of temperature of the metal at the glass-to-metal seals must not exceed 25° C per minute. The maximum temperature must not exceed 140° C.

In order to limit the rate of change of temperature of the anode seal, it is necessary for the mass of metal in close thermal contact with the anode disc to have a thermal capacity of not less than 11 cal/°C. 120 gm of brass or 52 gm of aluminium are suitable.

In order to limit the maximum temperature of the anode seal, the loss of heat from the metal in contact with the seal must be adequate. The seal temperature may be conveniently measured with a temperature sensitive paint.

Provision of circuit information in this publication does not imply a right to use any invention which may be involved and which is the subject of patents by whomsoever owned.

Whilst M-OV has taken care to ensure the accuracy of the information contained herein it accepts no responsibility for the consequences of any use thereof and also reserves the right to change the specification of goods without notice.
M-OV accepts no liability beyond that set out in its standard conditions of sale in respect of infringement of third party patents arising from the use of tubes or other devices in accordance with information contained herein.

Fig. 1 OUTLINE

Dimensions are maximum unless otherwise stated. This drawing should not be used for circuit design: see figs. 2 and 3.

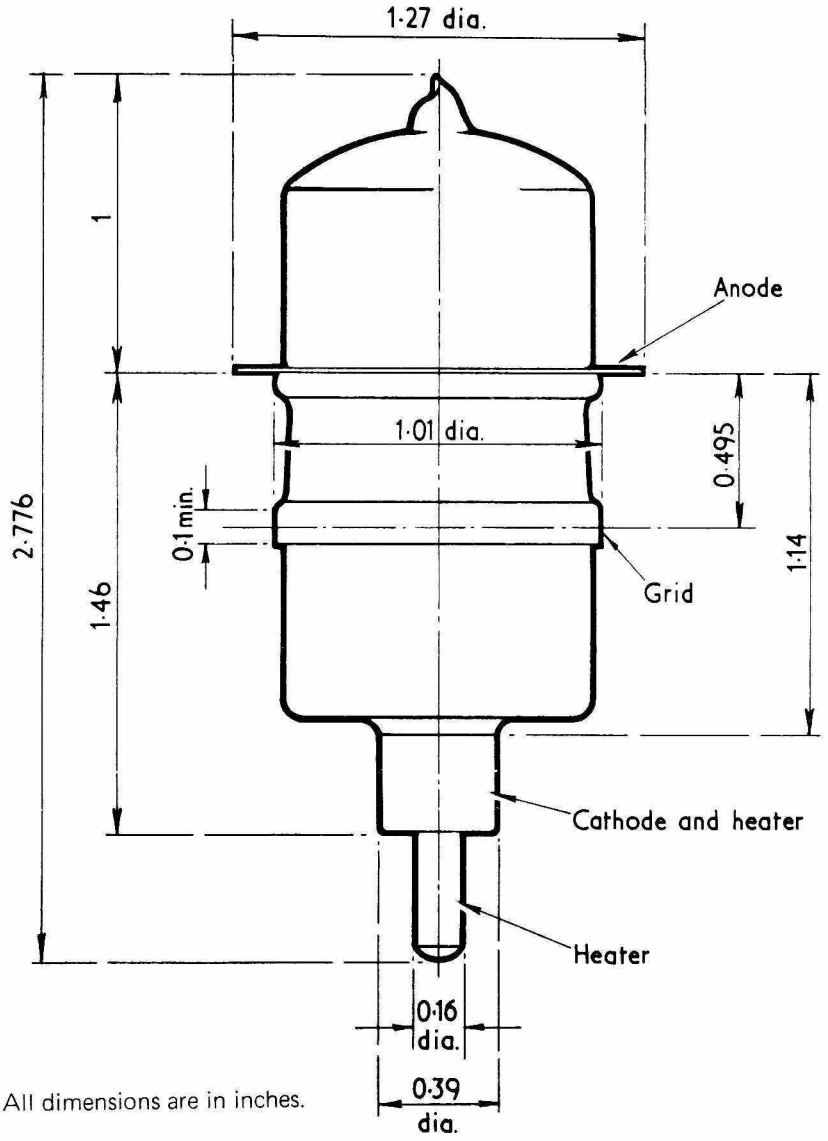

All dimensions are in inches.

Fig. 2

To assist in circuit design, this drawing gives the important dimensions of the gauge into which every valve is required to fit before leaving the factory.

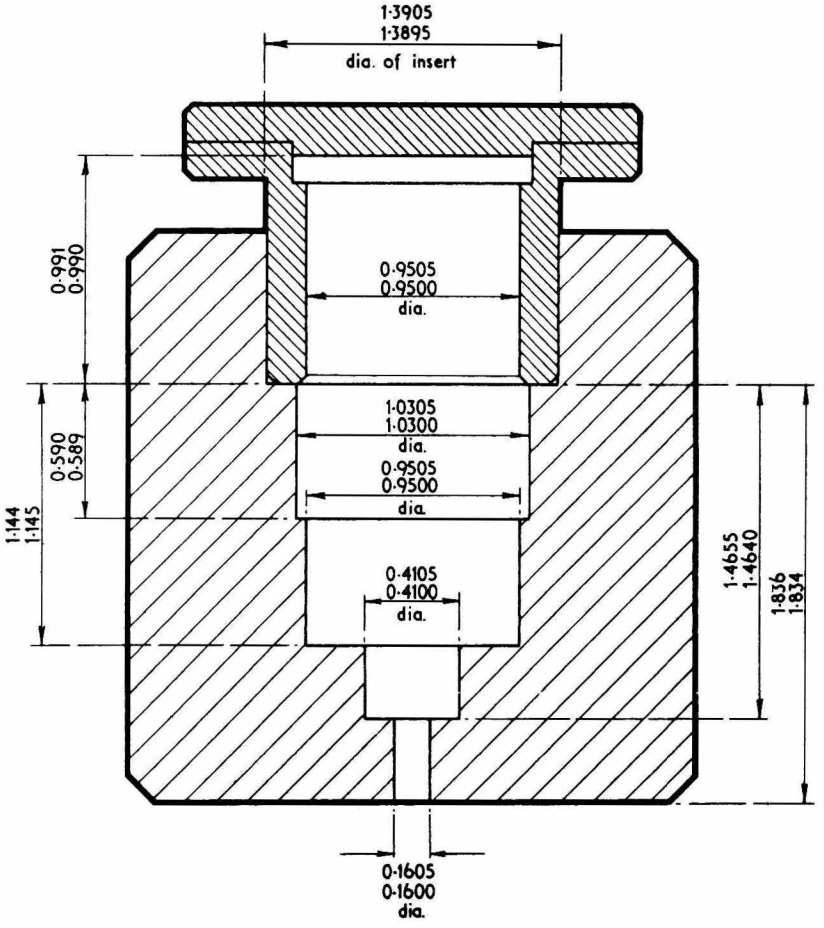

All dimensions are in inches.

Fig. 3
Circuit elements made to this drawing were used to obtain the various modes of operation and wavelengths shown graphically in fig. 8.

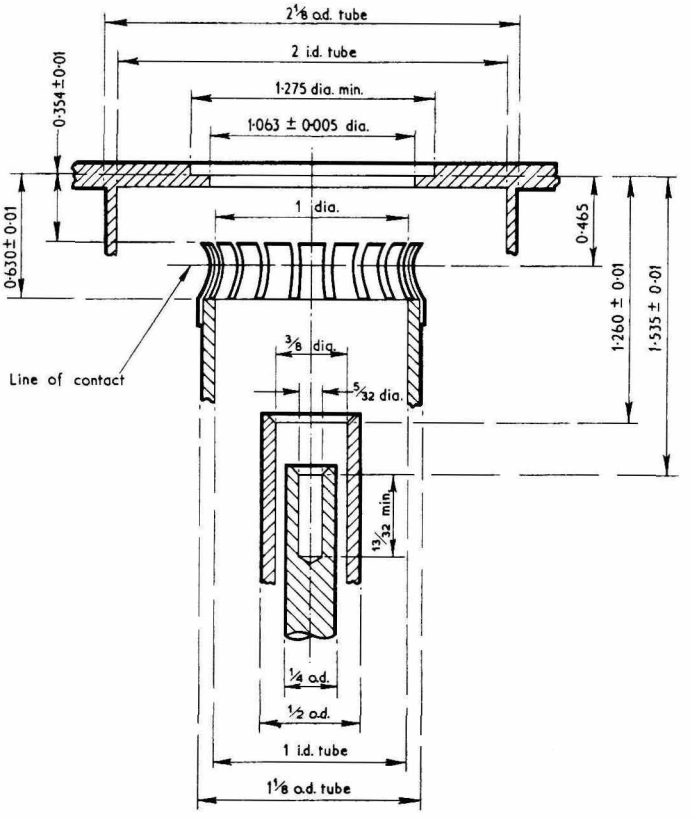

All dimensions are in inches.

Fig. 4 OSCILLATOR CIRCUIT

The ranges of wavelength obtained with the feedback probe at two different distances from the anode plane are as follows:-

'A'	Range of λ
3.5 cm	25 – 90 cm
7.0 cm	15 – 30 cm

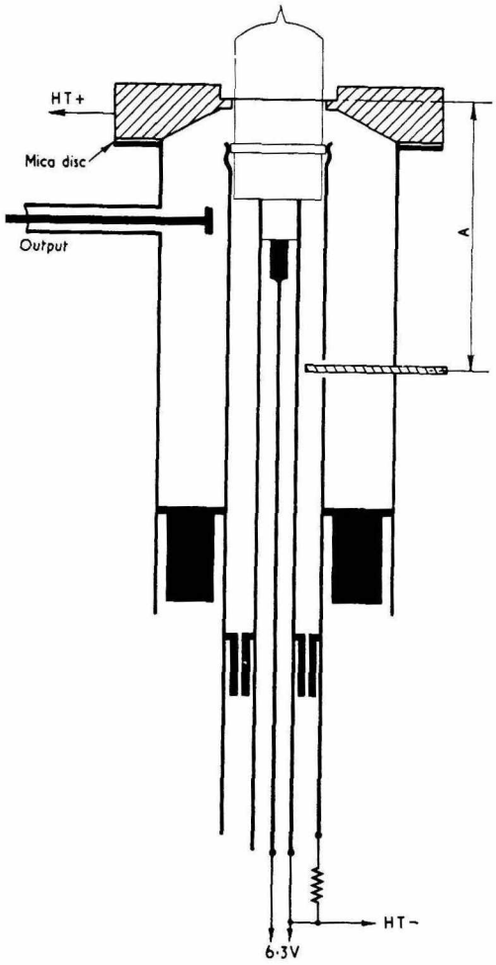

Fig. 5 AMPLIFIER CIRCUIT

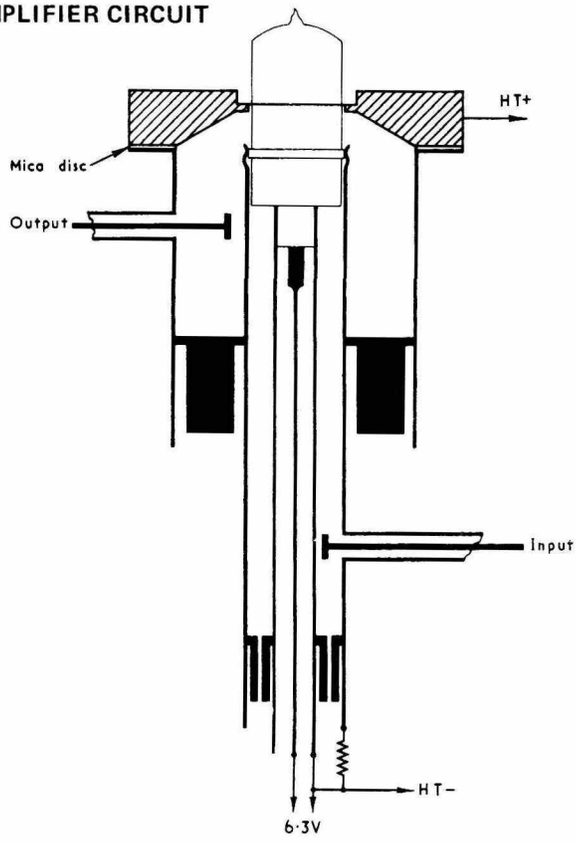

Fig. 6 The Circuits of Figs. 4 and 5 Modified for Cathode Bias

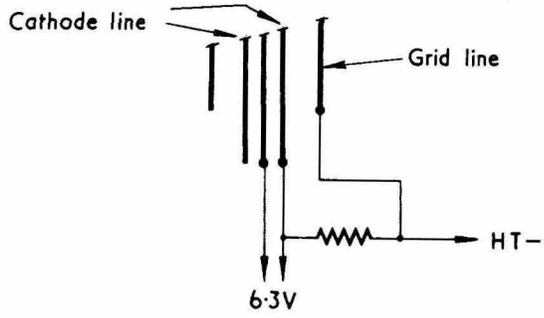

Fig. 7

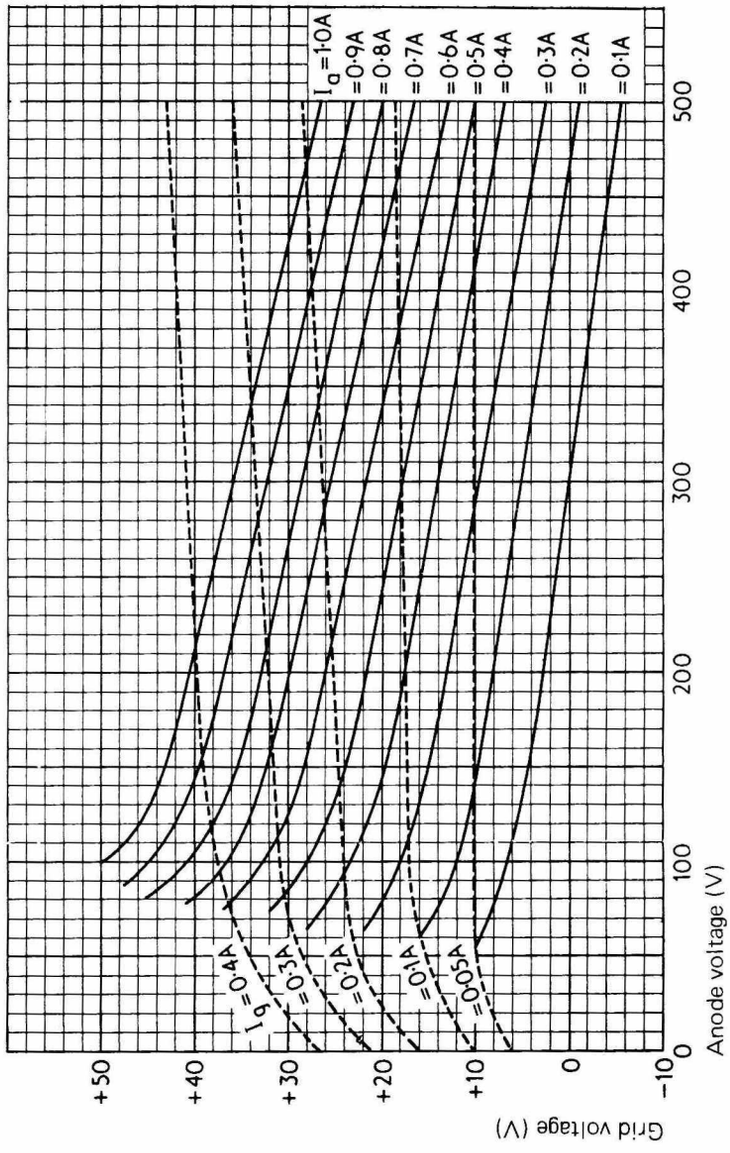
Grid voltage (V)
+50
+40
+30
+20
+10
0
−10
0
100
200
300
400
500
Anode voltage (V)
I_g = 0·4A
= 0·3A
= 0·2A
= 0·1A
= 0·05A
I_a = 1·0A
= 0·9A
= 0·8A
= 0·7A
= 0·6A
= 0·5A
= 0·4A
= 0·3A
= 0·2A
= 0·1A

Fig. 8 Typical Line Lengths For An Unloaded Self-Oscillator Having The Circuit Dimensions Shown In Fig. 3.

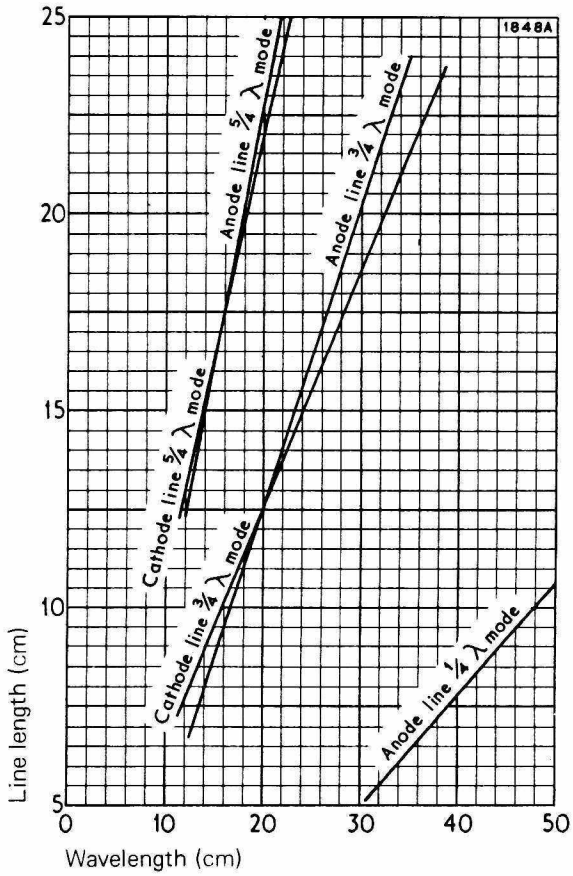

Fig. 9 Performance As A Common Grid Oscillator

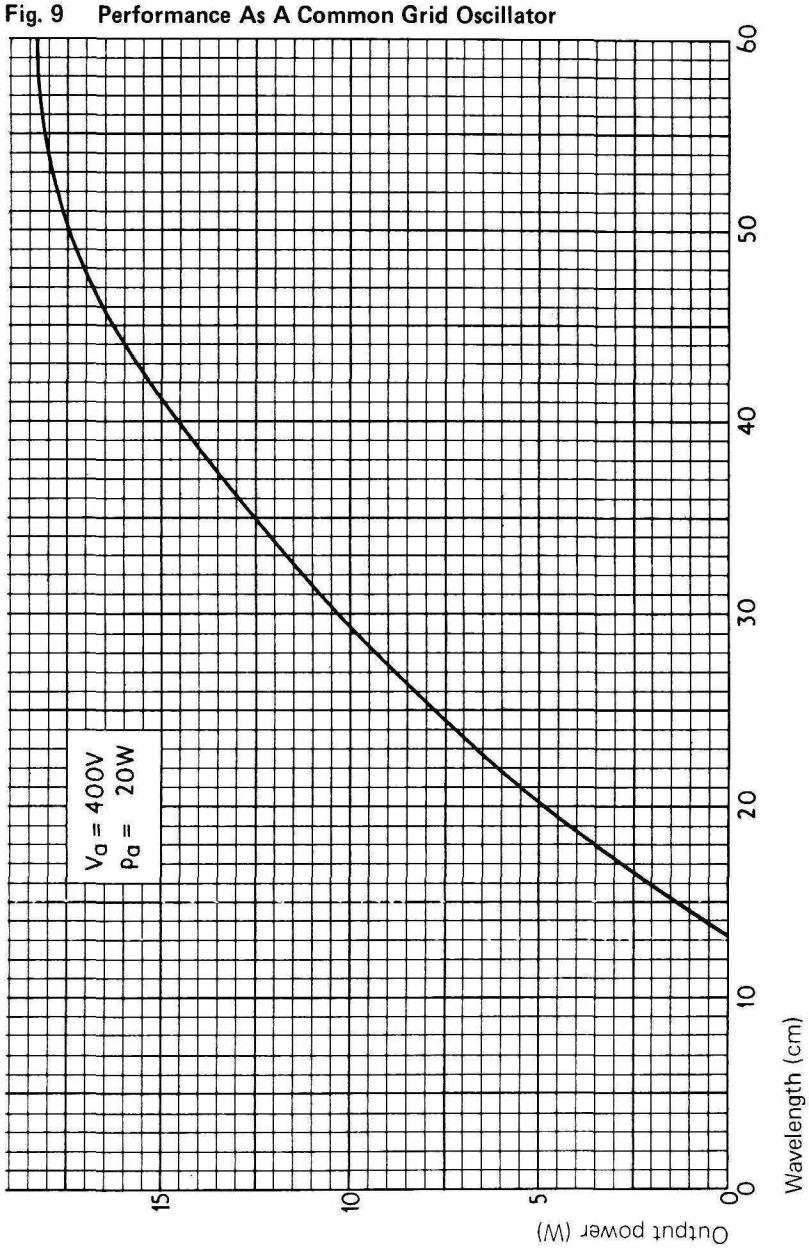
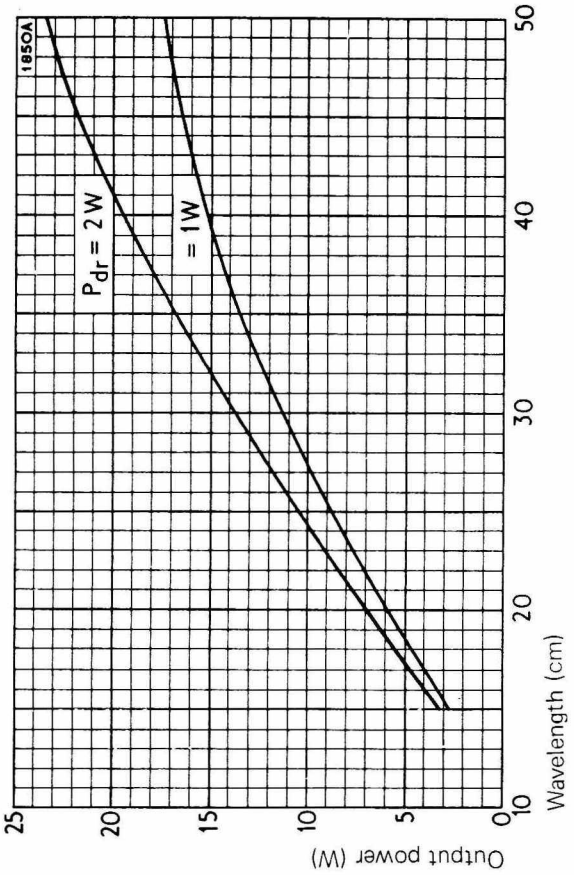
Fig. 10 Performance As A Common Grid Amplifier