INSTRUMENT CATHODE-RAY TUBE

- 14 cm diagonal rectangular flat face
- domed mesh post-deflection acceleration
- internal magnetic lens system for correction of orthogonality, astigmatism and eccentricity
- quick-heating cathode
- side contacts to deflection plates
- internal graticule
- high sensitivity and high brightness
- short overall length
- for compact oscilloscopes with up to 150 MHz bandwidth

QUICK REFERENCE DATA

Final accelerator voltage	$V_{g7(\ell)}$	16,5 kV
First accelerator voltage	V_{g4}	2,2 kV
Minimum useful scan area		100 mm x 80 mm
Deflection coefficient		
horizontal	M_x	8,3 V/cm
vertical	M_y	4 V/cm (max. 4,2 V/cm)
Photographic writing speed	p.w.s.	2,0 cm/ns

OPTICAL DATA

Screen	metal-backed phosphor
type	GH
colour	green
persistence	medium short
Useful screen area	⩾ 102 mm x 82 mm; note 1
Useful scan area	⩾ 100 mm x 80 mm
Internal graticule	type 93; see Fig. 5

HEATING

Indirect by AC or DC*

Heater voltage	V_f	6,3 V
Heater current	I_f	0,24 A
Heating time to attain 10% of the cathode current at equilibrium conditions		approx. 5 s

* Not to be connected in series with other tubes.

MECHANICAL DATA

Dimensions and connections (see also outline drawings)

Overall length (socket included)	≤ 338 mm
Faceplate dimensions	118 ± 0,5 mm x 98 ± 0,5 mm
Net mass	approx. 1 kg
Base	12 pin, all glass, JEDEC B12-246

Mounting

The tube can be mounted in any position. It must not be supported by the socket and not by the base region alone. The reference points on adjoining edges of the faceplate (see Fig. 5) enable the tube to be mounted accurately in the front panel, thus providing optimum alignment of the internal graticule.

Accessories

Pin protector (required for shipping)	supplied with tube
Socket with solder tags	type 55594
Socket with printed-wiring pins	type 55595
Side contact connector for ϕ 0,6 mm pin (4 required)	type 55596 (AMP87313)
Final accelerator contact connector	type 55569/55597
Mu-metal shield	55599
FOCUSING	electrostatic
DEFLECTION	double electrostatic
x-plates	symmetrical
y-plates	symmetrical

CAPACITANCES

x_1 to all other elements except x_2	$C_{x1(x2)}$	2,4 pF
x_2 to all other elements except x_1	$C_{x2(x1)}$	2,4 pF
y_1 to all other elements except y_2	$C_{y1(y2)}$	1,9 pF
y_2 to all other elements except y_1	$C_{y2(y1)}$	1,9 pF
x_1 to x_2	C_{x1x2}	1,8 pF
y_1 to y_2	C_{y1y2}	1,5 pF
Control grid to all other elements	C_{g1}	6 pF
Cathode to all other elements	C_k	3,2 pF
Focusing electrode to all other elements	C_{g3}	5 pF

DIMENSIONS AND CONNECTIONS

Dimensions in mm

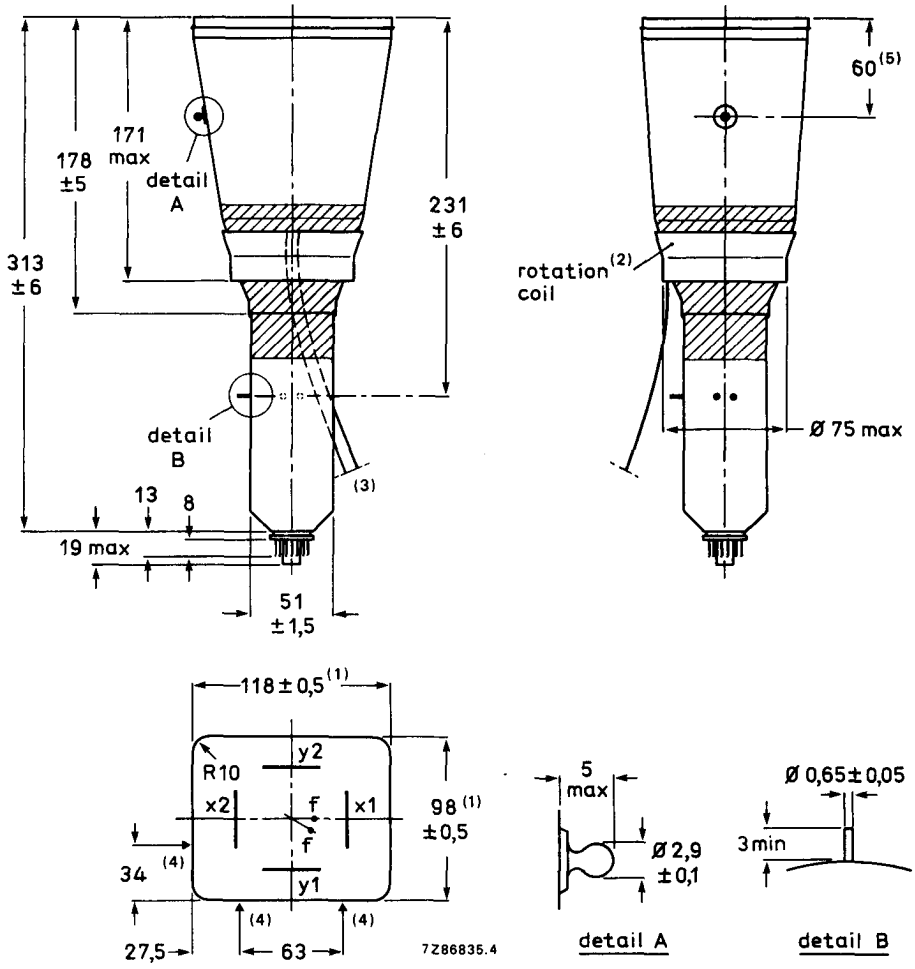

Fig. 1 Outlines.

1. Dimensions of faceplate only. The complete assembly of faceplate and cone (frit seal included) will pass through an opening of 122 x 102 mm (diagonal 153 mm).
2. The coil is fixed to the envelope with resin and adhesive tape.
3. The length of the connecting leads of the rotation coil is min. 350 mm.
4. Reference points on faceplate for graticule alignment (see Fig. 5).
5. The centre of the final accelerator contact is situated within a square of 10 mm x 10 mm around the indicated position.

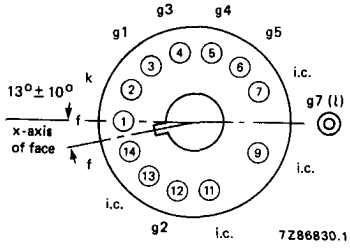

Fig. 2 Pin arrangement; bottom view.

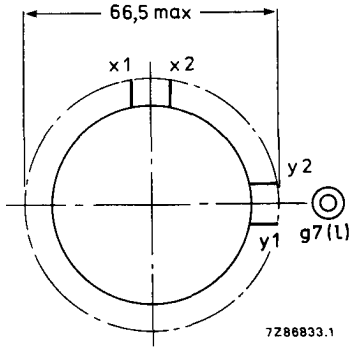

Fig. 3 Side-contact arrangement bottom view.

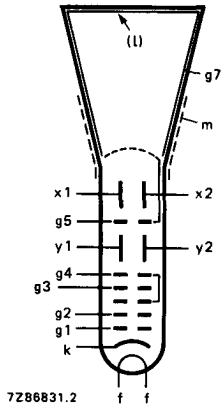

Fig. 4 Electrode configuration.

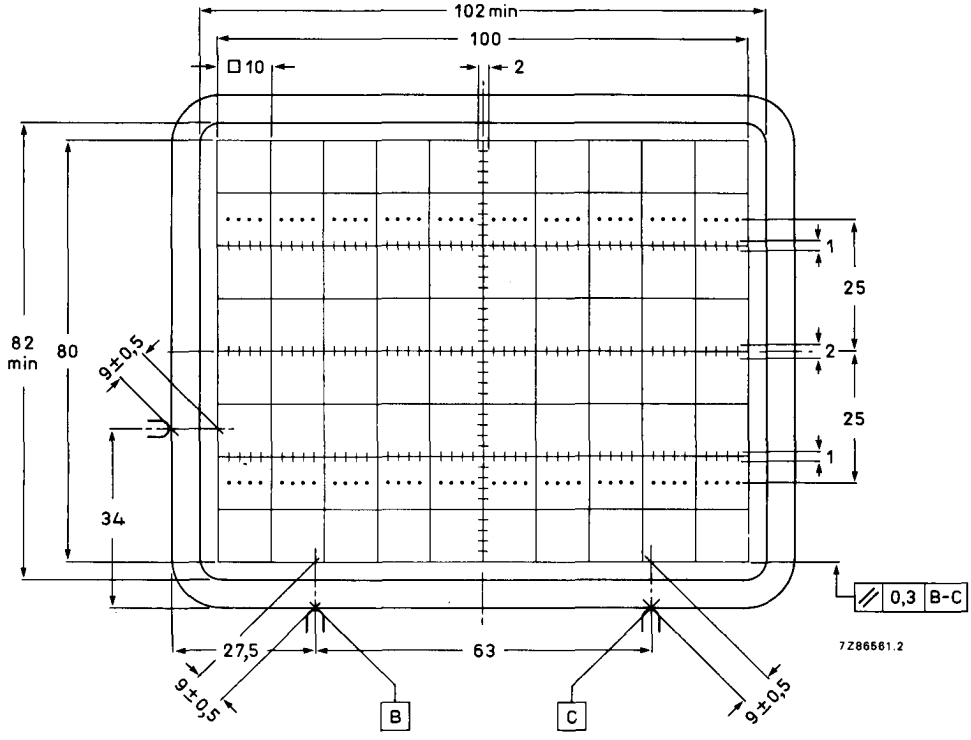

Fig. 5 Front view of tube with internal graticule, type 93. The faceplate reference points are used for aligning the graticule with the faceplate.

Line thickness = 0,2 mm; dot diameter = 0,4 mm; colour: red.

TYPICAL OPERATION (voltages with respect to cathode)

Conditions

Final accelerator voltage	$V_{g7(\ell)}$	16,5 kV	
Mean deflection plate potential		2,2 kV	note 2
Shield voltage for optimum geometry	V_{g5}	2,2 kV	note 3
First accelerator and astigmatism control voltage	V_{g4}	2,2 kV	note 3
Focusing voltage	V_{g3}	400 to 800 V	
Grid 2 voltage	V_{g2}	2,2 kV	
Cut-off voltage for visual extinction of focused spot	$-V_{g1}$	50 to 100 V	

Outer conductive coating (m) and mu-metal shield to be earthed.

Performance

Horizontal deflection coefficient	M_x	8,3 V/cm ± 10%	
Vertical deflection coefficient	M_y	4,0 V/cm ± 5%	
Deviation of deflection linearity		⩽ 2 %	note 4
Geometry distortion			note 5
Eccentricity of undeflected spot			
in horizontal direction		⩽ 4 mm	
in vertical direction		⩽ 2 mm	
Angle between x- and y-traces		90°	note 2
Angle between x-trace and x-axis of internal graticule		⩽ 5°	note 6
Luminance reduction with respect to screen centre			
x-axis, outer graticule line		⩽ 30 %	
y-axis, outer graticule line		⩽ 30 %	
any corner		⩽ 50 %	
Grid drive for 10 μA screen current	V_d	approx. 20 V	
Line width	l.w.	approx. 0,35 mm	note 7
Photographic writing speed (V_d = 50 V; Polaroid 612 film; GH phosphor; F = 1,2; magnification 0;5)	p.w.s.	2,0 cm/ns	

LIMITING VALUES (Absolute maximum rating system)

Final accelerator voltage	$V_{g7(\ell)}$	max.	18	kV	note 8
Shield voltage	V_{g5}	max.	3,3	kV	
First accelerator and astigmatism control voltage	V_{g4}	max.	3,3	kV	
Focusing electrode voltage	V_{g3}	max.	2,5	kV	
Grid 2 voltage	V_{g2}	max.	2,5	kV	
Control grid voltage	$-V_{g1}$	max.	200	V	
		min.	0	V	
Cathode to heater voltage					
positive	V_{kf}	max.	125	V	
negative	$-V_{kf}$	max.	125	V	
Heater voltage	V_f	max.	6,6	V	
		min.	6,0	V	
Voltage between g2 and g4	$\Delta V_{g2,g4}$	max.	2	kV	
Voltage between g4,g5 and any deflection plate	$\Delta V_{g4,g5,x,y}$	max.	500	V	
Grid drive, averaged over 1 ms	V_d	max.	25	V	
Screen dissipation	W_ℓ	max.	8	mW/cm^2	
Control grid circuit resistance	R_{g1}	max.	1	MΩ	

NOTES

1. As the frit seal is visible through the faceplate, and not necessarily aligned with the internal graticule, application of an external passe-partout with open area of max. 102 mm x 82 mm is recommended. The internal graticule is aligned with the faceplate by using the faceplate reference points (see Fig. 5).
2. The deflection plates must be operated symmetrically; floating mean x- or y-potentials will result into non-uniform line width and geometry distortion. The mean x- and y-potentials should be equal; under this condition the tube will be within the specification without corrections for astigmatism and geometry.

   The tube features internal magnetic correction for orthogonality between x- and y-traces, spot shaping (astigmatism) and eccentricity calibration.
3. For some applications a mean x-potential up to 50 V positive with respect to mean y-potential is inevitable. In this case V_{g5} must be made equal to mean x-potential, and a range of 0 to −25 V with respect to mean y-potential will be required on g4 for astigmatism correction. The circuit resistance for V_{g4} should be $\leqslant$ 10 kΩ.
4. The sensitivity at a deflection of less than 75% of the useful scan will not differ from the sensitivity at a deflection of 25% of the useful scan by more than the indicated value.
5. A graticule consisting of concentric rectangles of 100 mm x 80 mm and 98 mm x 78 mm is aligned with the internal graticule. With optimum trace rotation correction the edges of a raster will fall between these rectangles.
6. The tube has a trace rotation coil, fixed onto the lower cone part. The coil has 1000 turns and a typical resistance of 185 ± 25 Ω at 20 °C, which increases by approx. 0,4%/K for rising temperature. Approx. 6,5 mA causes 1° trace rotation. Thus maximum required voltage is approx. 13 V for tube tolerances (± 5°) and earth magnetic field with reasonable shielding (± 2°).
7. Measured with the shrinking raster method in the centre of the screen under typical operating conditions, adjusted for optimum spot size at a beam current I_ℓ = 10 μA.
8. The X-ray dose rate remains below the acceptable value of 36 pA/kg (0,5 mR/h), when the tube is used within its limiting values (beam current $I_\ell \leqslant$ 100 μA).