INSTRUMENT CATHODE-RAY TUBE

- mono accelerator
- 14 cm diagonal rectangular flat face
- internal graticule
- low power quick heating cathode
- high brightness, long-life GY phosphor
- high precision, factory adjusted for orthogonality, astigmatism and eccentricity
- for oscilloscopes with 20 to 30 MHz bandwidth and read-out devices

QUICK REFERENCE DATA

Accelerator voltage	$V_{g2,g4}$	2000 V
Minimum useful scan area		100 mm x 80 mm
Deflection coefficient		
horizontal	M_x	19 V/cm
vertical	M_y	11,5 V/cm

OPTICAL DATA

Screen		
type		GY
colour		yellowish-green
persistence		medium
Useful screen area		>102 mm x 82 mm ;note 1
Useful scan area		>100 mm x 80 mm
Internal graticule		type 123; see Fig.4

HEATING

Indirect by AC or DC *		
Heater voltage	V_f	6.3 V
Heater current	I_f	0.1 A
Heating time to attain 10% of the cathode current at equilibrium conditions		approx. 7 s

* not to be connected in series with other tubes.

MECHANICAL DATA

Dimensions and connections (see also outline drawings)

Overall length (including socket)	< 333 mm
Faceplate dimensions	118 ± 0.5 mm x 98 ± 0.5 mm
Net mass	approx. 1 kg
Base	12 pin, all glass JEDEC B12-246

Mounting

The tube can be mounted in any position. It must not be supported by the socket and not by the base region alone. The reference points (A, B and C) on adjoining edges of the faceplate (see Fig.4) enable the tube to be positioned accurately in the front panel, for optimum alignment of the internal graticule with respect to the bezel.

Accessories

Socket with solder tags	
Socket with printed wiring pins	type 55595
Mu metal shield	55598/55458

FOCUSING	electrostatic
DEFLECTION	double electrostatic
x plates	symmetrical
y plates	symmetrical

DIMENSIONS AND CONNECTIONS

Dimensions in mm

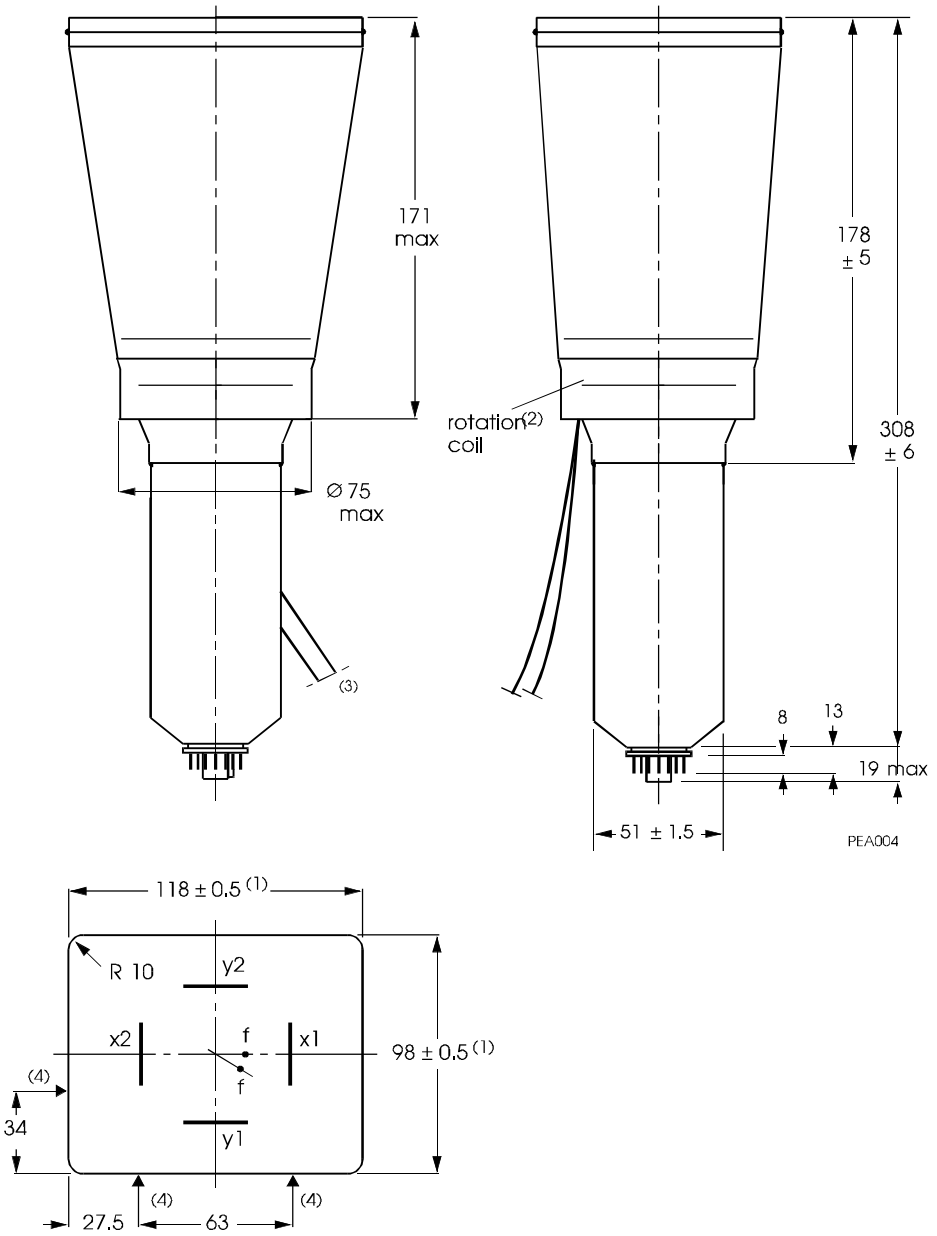

Fig.1 Mechanical outlines.

(1) Dimensions of faceplate only. The complete assembly of faceplate and cone (frit seal included) will pass through an opening of 122 mm x 102 mm.
(2) The coil is fixed to the envelope with resin.
(3) The length of rotation coil connecting leads is min. 350 mm.
(4) Reference points on faceplate for graticule alignment (see Fig. 4).

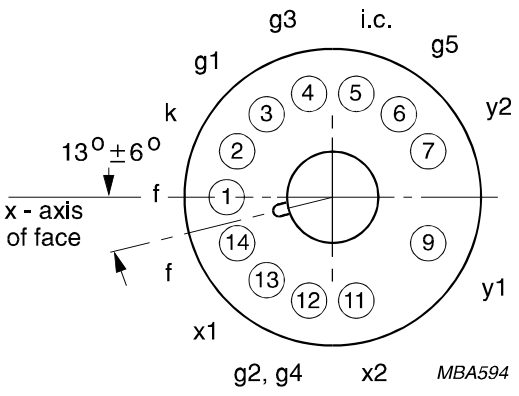

Fig.2 Pin arrangement, bottom view.

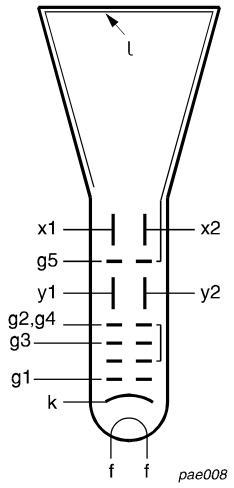

Fig.3 Electrode configuration.

Internal graticule

The internal graticule is aligned with the faceplate by using the faceplate reference points, see Fig.4 and note 1.The reference points A, B and C are for aligning the graticule with the faceplate.
Line thickness = 0.18 mm; dot diameter = 0.38 mm; colour red.

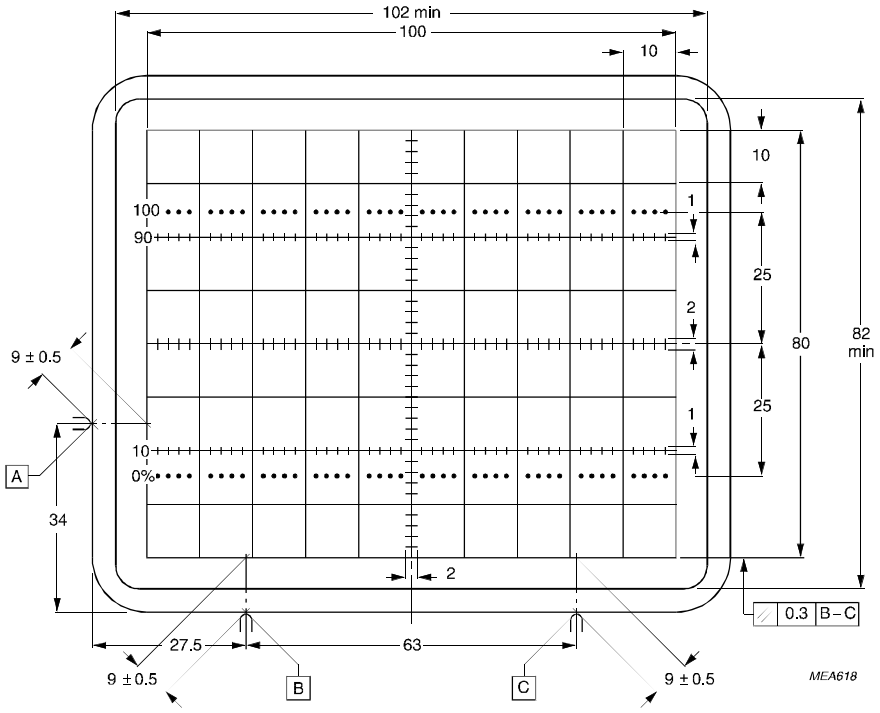

Fig.4 Front view of the tube with internal graticule, type 123.

TYPICAL OPERATION (voltages are with respect to the cathode)

Conditions

Mean deflection plate potential		2 kV	note 2
Shield voltage for optimum geometry	$V_{g5,(I)}$	2 kV	note 3
Accelerator and astigmatism control voltage	$V_{g2,g4}$	2 kV	note 4
Focus voltage	V_{g3}	100 to 200 V	note 5
Cut-off voltage for visual extinction of focused spot	$-V_{g1}$	22 to 65 V	note 6

PERFORMANCE

Horizontal deflection coefficient	M_x	19 V/cm ± 10%	
Vertical deflection coefficient	M_y	11,5 V/cm ± 5%	
Deviation of deflection linearity		< 2%	note 7
Geometry distortion			note 8
Eccentricity of undeflected spot			
in horizontal direction		< 4 mm	note 9
in vertical direction		< 2 mm	
Angle between x and y traces		90 ± 0.5°	note 9
Angle between x-trace and x-axis of internal graticule		< 5°	note 10
Luminance reduction with respect to screen centre			
x-axis, outer graticule line		< 30%	
y-axis, outer graticule line		< 30%	
any corner		< 50%	

Grid drive for 10 μA screen current	V_d	approx. 10 V	Fig.5; note 6
Line width	l.w.	approx. 0.3 mm	note 11

LIMITING VALUES (Absolute maximum rating system)

Accelerator voltage	$V_{g2,g4}$	max. 2.2 kV	
Shield voltage	$V_{g5(I)}$	max. 2.2 kV	
Focus electrode voltage	V_{g3}	max. 2.2 kV	
Control grid voltage	$-V_{g1}$	max. 200 V	
			min. 0 V
Cathode to heater voltage			
	positive	V_{kf}	max. 125 V
	negative	$-V_{kf}$	max. 125 V
Heater voltage	V_f	max. 6.6 V	
			min. 6.0 V
Grid drive, averaged over 1 ms	V_d	max. 20 V	
Screen dissipation	W	max. 3 mW/cm^2	
Control grid circuit resistance	R_{g1}	max. 1 MΩ	

CAPACITANCES *

x_1 to all other elements except x_2	$C_{x1(x2)}$	4.8 pF
x_2 to all other elements except x_1	$C_{x2(x1)}$	4 pF
y_1 to all other elements except y_2	$C_{y1(y2)}$	3.4 pF
y_2 to all other elements except y_1	$C_{y2(y1)}$	3.4 pF
x_1 to x_2	C_{x1x2}	3.3 pF
y_1 to y_2	C_{y1y2}	1 pF
Control grid to all other elements	C_{g1}	6 pF
Cathode to all other elements	C_k	3 pF

* Approximate values

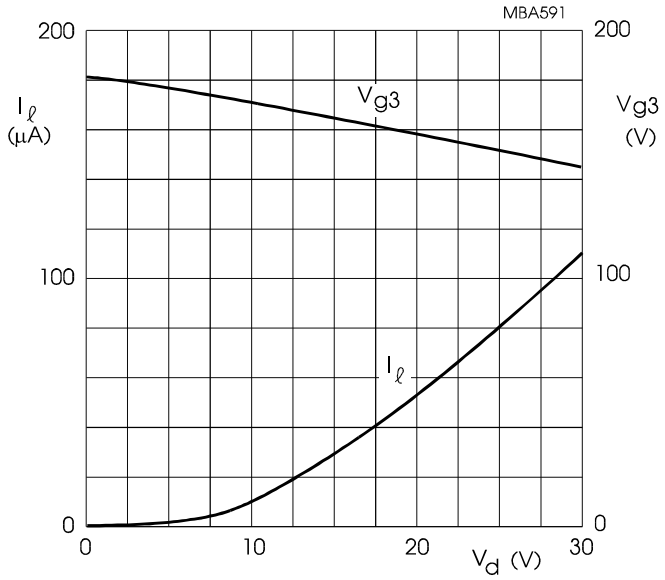

Fig.5 Typical screen current (I_l) and focus voltage (V_{g3}) curves as a function of grid drive voltage (V_d) at $V_{g2,g4,g5}$ = 2 kV.

NOTES

1. Because the frit seal is visible through the faceplate, and is not necessarily aligned with the internal graticule, application of an external passe-partout with an open area of max. 102 mm x 82 mm is recommended. The internal graticule is aligned with the faceplate by using the faceplate reference points (see Fig.4).
2. The deflection plates must be operated symmetrically. Asymmetric drive introduces trace distortion. It is recommended that the tube is operated with equal mean x- and y-potentials in order to minimize tube adjustments. In this event g_5 may be connected to g_2, g_4 and all made equal to mean y-potential for optimum spot (see also notes 3 and 4).
   A difference between mean x- and y-potentials up to 75 V is permissible. However, this may influence the specified deflection coefficients and separate voltages on g_4 and g_5 will be required.
3. The tube will meet the geometry specification (see note 8) if V_{g5} is equal to mean x-potential. A range of ± 30 V around mean x-potential may be applied for further correction.
4. Optimum spot is obtained with $V_{g2,g4}$ equal to mean y-potential (see note 2). Generally, a tolerance of ± 4 V has no visible effect. $V_{g2,g4}$ tends to be lower with V_{g5} more positive. The circuit impedance $R_{g2,g4}$ should be less than 10 kΩ.
5. An actual focus range of 30 V should be provided on the front panel. V_{g3} decreases with increasing grid drive (see also Fig.5).
6. Intensity control on the front panel should be limited to the maximum useful screen current (approx. 50 μA; see also Fig.5). It should be adjusted either by the grid drive voltage (up to 22 V) or for maximum acceptable line width. The corresponding cathode current or $I_{g2,g4}$ (up to 500 μA) depends on the cut-off voltage and therefore cannot be used for control settings.
7. The sensitivity at a deflection of less than 75% of the useful scan will not differ from the sensitivity at a deflection of 25% of the useful scan by more than the indicated value.
8. A graticule consisting of concentric rectangles of 100 mm x 80 mm and 98 mm x 78 mm is aligned with the internal graticule. With optimum trace rotation correction, the raster will fall between these rectangles.
9. The tube features internal magnetic correction for orthogonality between x- and y-traces, spot shaping (astigmatism) and eccentricity calibration.
10. The tube has a trace rotation coil fixed to the lower cone part. The coil has a maximum resistance of 260 Ω at 80 °C. The maximum required voltage is approximately 11 V for tube tolerances (± 5°) and earth magnetic field with reasonable shielding (± 2°).
11. Measured with the shrinking raster method in the centre of the screen under typical operating conditions, adjusted for optimum spot size at beam current I_l = 10 μA.
    The beam current I_l can be measured on g_5 and is approx. equal to $I_{g5(l)}$.

© 2006 Professional Display Systems B.V. All rights reserved. Printed in the Netherlands.

The information presented in this document may be changed without notice. It is advisable to contact the supplier for availability and latest data before designing this product into equipment.
Publication of this document does not convey nor imply any license under patent- or other industrial or intellectual property rights.