OSCILLOSCOPE TUBE with flat face, post deflection acceleration by means of a helical electrode, side contacts, metal-backed screen and high sensitivity for high frequency and high writing-speed applications

SCREEN

Type	Fluorescence	Phosphorescence	Persistence
D13-19BE	Blue	Blue	Medium short
D13-19GH	Green	Green	Medium short
D13-19GP	Green to bluish green	Green	Medium short

Useful screen diameter min. 108 mm

Useful scan at $V_{g7}/V_{g4} = 6$

in the x direction 100 mm

in the y direction 60 mm

The useful scan may vertically be shifted max. 3 mm with respect to the geometric centre of the face plate

For further screen properties please refer to front of this section

HEATING

Indirect by A.C. or D.C.; parallel supply

Heater voltage $V_f = 6.3$ V

Heater current $I_f = 0.3$ A

CAPACITANCES

Grid No.1 to all other electrodes	C_{g_1}	=	5.5 pF
Cathode to all other electrodes	C_k	=	3.5 pF
x_1 plate to all other electrodes except x_2 plate	C_{x_1}	=	3.0 pF
x_2 plate to all other electrodes except x_1 plate	C_{x_2}	=	3.0 pF
y_1 plate to all other electrodes except y_2 plate	C_{y_1}	=	3.0 pF
y_2 plate to all other electrodes except y_1 plate	C_{y_2}	=	3.0 pF
x_1 plate to x_2 plate	$C_{x_1-x_2}$	=	1.9 pF
y_1 plate to y_2 plate	$C_{y_1-y_2}$	=	1.0 pF

PHILIPS

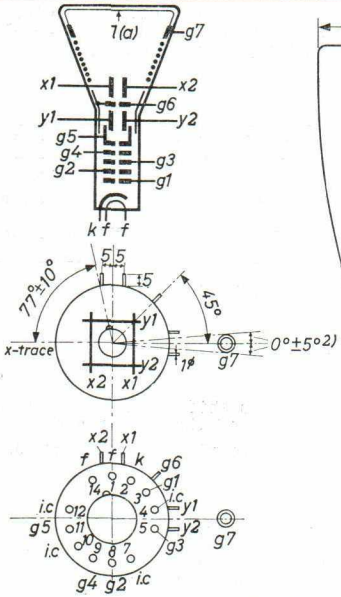

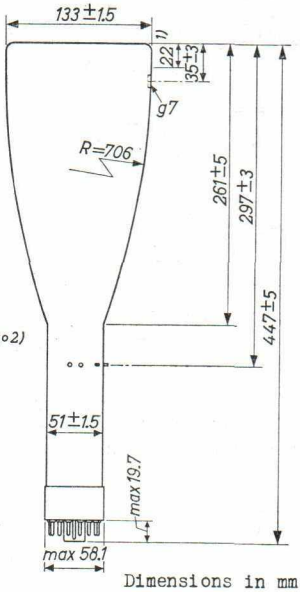

Dimensions in mm

g_5 = deflection plate shield

Base: DIHEPTAL 12 p

g6 = isolation shield

The post-accelerator helix is connected between g_7 and g_6. The resistance of the helix is 200 to 1000 MΩ

MOUNTING POSITION: any

The tube should not be supported by the base alone

ACCESSORIES

Socket	5914/20
Connector for side contacts	55561
Mu-metal shield	55551
Post accelerator contact connector	55563

NET WEIGHT 910 g Shipping weight 2300 g

1) Straight part of the bulb

2) Location of the recessed cavity button contact with respect to the x-trace

FOCUSING electrostatic

DEFLECTION double electrostatic

x plates symmetrical

y plates symmetrical

Angle between x and y traces $90^{o} \pm 1^{o}$

LINE WIDTH

Post accelerator voltage	V_{g7}	=	10 kV
Grid No.4 voltage	V_{g4}	=	1670 V
Grid No.2 voltage	V_{g2}	=	1670 V
Beam current	I_{ℓ}	=	10 μA
Line width	l.w.	=	0.4 mm

OPERATING CHARACTERISTICS

Post accelerator voltage	V_{g7}	=	10 kV
Isolation shield voltage	V_{g6}	=	1670 ± 167 V [1]
Deflection plate shield voltage	V_{g5}	=	1670 V [1]
Second accelerator voltage	V_{g4}	=	1670 ± 83 V [1]
Focusing electrode voltage	V_{g3}	=	320 to 500 V
First accelerator voltage	V_{g2}	=	1670 V
Grid No.1 voltage	V_{g1}	=	-53 to -82 V [2]
Deflection factor			
horizontal	M_x	=	27 to 33 V/cm
vertical	M_y	=	9.5 to 12.4 V/cm
Deviation of linearity of deflection		=	max. 2 % [1][3]
Pattern distortion		see notes [1][4]	

[1][2][3][4] See page 4

[1]) In general the voltages on g_6, g_5, g_4 and the average potential of the deflection plates should be equal

Variation of the isolation shield voltage V_{g_6} (max.±10% of V_{g_4}) serves to correct pincushion and barrel pattern distortion

A small potential difference (max. ±5 % of V_{g_4}, obtained by varying V_{g_4}) between the y plates and g_4 may be desirable for obtaining optimum sharpness

[2]) For visual extinction of the focused spot

[3]) The sensitivity (of both x and y plate pairs separately) for a deflection of less than 75% of the useful scan will not differ more than 2% from the sensitivity for a deflection of 25 % of the useful scan

[4]) When, after alignment of the x trace with the horizontal centre line of the graticule, a horizontal or vertical trace is adjusted so that its geometric centre just touches one side of a rectangle of 100 mm x 60 mm which is concentric with the screen, no point of the centre of this trace will be within a concentric rectangle of 98 mm x 58.2 mm

[5]) If use is made of the full deflection capabilities of the tube, the deflection plates will intercept part of the electron beam near the edge of the scan; a low impedance deflection plate drive is therefore desirable

[6]) Values to be taken into account for the calculation of the V_{g3}-potentiometer

LIMITING VALUES (Absolute limits)

Post accelerator voltage	V_{g7}	= max. 12 kV = min. 6 kV
Isolation shield voltage	V_{g6}	= max. 2200 V
Deflection plate shield voltage	V_{g5}	= max. 2200 V
Second accelerator voltage	V_{g4}	= max. 2200 V = min. 1000 V
Focusing electrode voltage	V_{g3}	= max. 1500 V
First accelerator voltage	V_{g2}	= max. 2200 V = min. 1000 V
Grid No.1 voltage		
negative	$-V_{g1}$	= max. 200 V
positive	$+V_{g1}$	= max. 0 V
peak positive	$+V_{g1\ p}$	= max. 2 V
Ratio V_{g7}/V_{g4}	V_{g7}/V_{g4}	= max. 6
Peak voltage between second accelerator and any deflection plate	$V_{g4-x\ p}$ $V_{g4-y\ p}$	= max. 500 V = max. 500 V
Voltage between cathode and heater		
cathode positive	V_{kf}(k pos)	= max. 200 V
cathode negative	V_{kf}(k neg)	= max. 125 V
First accelerator dissipation	W_{g2}	= max. 6 W
Screen dissipation	W_{ℓ}	= max. 3 mW/cm^2

CIRCUIT DESIGN VALUES

Focusing voltage	V_{g3} =	190 to 300 V	per kV of V_{g4}
Grid No.1 voltage [2]	$-V_{g1}$ =	32 to 49 V	per kV of V_{g2}
Deflection factors at V_{g7}/V_{g4} = 6			
horizontal	M_x =	16 to 20 V/cm	per kV of V_{g4}
vertical	M_y =	5.7 to 7.4 V/cm	per kV of V_{g4}
Grid No.1 circuit resistance		R_{g1} = max. 1.5 MΩ	
Deflection plate resistance		See note [5]	
Grid No.3 current		I_{g3} = -15 to +10 μA [6]	
Ratio V_{g7}/V_{g4}		V_{g7}/V_{g4} = 6	

[2][5][6] See page 4