OSCILLOSCOPE TUBE with flat face, post deflection acceleration by means of a helical electrode, side contacts, high sensitivity and metal-backed screen

SCREEN

Type	Fluorescence	Phosphorescence	Persistence
D13-15BE	Blue	Blue	Medium short
D13-15GH	Green	Green	Medium short
D13-15GL	Yellowish green	Yellowish green	Medium short
D13-15GM	Purplish blue	Yellowish green	Long

Useful screen diameter min. 114 mm

Useful scan at V_{g7}/V_{g4} = 2 and V_{g7}/V_{g2} = 2

in the x direction min. 100 mm

in the y direction min. 60 mm

The useful scan may vertically be shifted max. 4 mm with respect to the geometric centre of the face plate

For further screen properties please refer to front of this section

HEATING

Indirect by A.C. or D.C.; parallel supply

Heater voltage V_f = 6.3 V

Heater current I_f = 0.3 A

CAPACITANCES

Grid No.1 to all other electrodes	C_{g_1}	=	6.4 pF
Cathode to all other electrodes	C_k	=	3.9 pF
x_1 plate to all other electrodes except x_2 plate	C_{x_1}	=	3.0 pF
x_2 plate to all other electrodes except x_1 plate	C_{x_2}	=	3.0 pF
y_1 plate to all other electrodes except y_2 plate	C_{y_1}	=	2.8 pF
y_2 plate to all other electrodes except y_1 plate	C_{y_2}	=	2.8 pF
x_1 plate to x_2 plate	$C_{x_1-x_2}$	=	1.9 pF
y_1 plate to y_2 plate	$C_{y_1-y_2}$	=	1.5 pF

PHILIPS

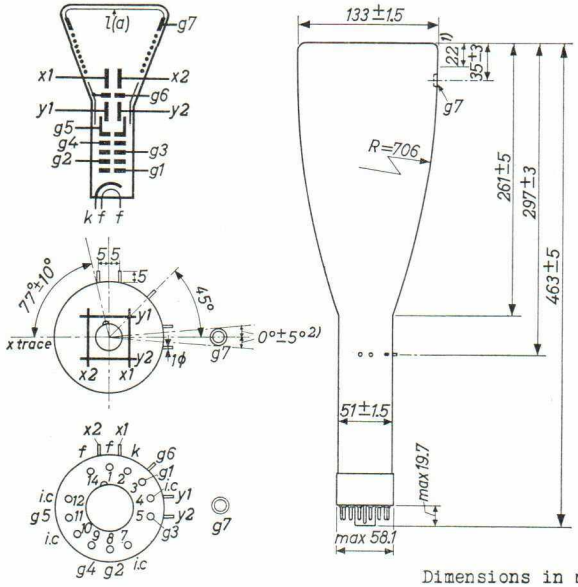

Dimensions in mm

Base: DIHEPTAL 12 p

g_5 = deflection plate shield

g_6 = isolation shield

The post-accelerator helix is connected between g_7 and g_6. The resistance of the helix is min. 300 MΩ

MOUNTING POSITION: any

The tube should not be supported by the base alone

ACCESSORIES

Socket	5914/20
Connector for side contacts	55561
Mu-metal shield	55551
Post accelerator contact connector	55563

NET WEIGHT 910 g

1) Straight part of the bulb

2) Location of the recessed cavity button contact with respect to the x-trace

FOCUSING electrostatic

DEFLECTION double electrostatic

x plates symmetrical

y plates symmetrical

Angle between x and y traces $90^{o} \pm 1^{o}$

LINE WIDTH

Post accelerator voltage	V_{g_7}	=	4000 V
Grid No.4 voltage	V_{g_4}	=	2000 V
Grid No.2 voltage	V_{g_2}	=	2000 V
Beam current	I_{ℓ}	=	10 μA
Line width	l.w.	=	0.5 mm

The line width is measured with the shrinking raster method

OPERATING CHARACTERISTICS

Post accelerator voltage	V_{g_7}	=	4000 V
Isolation shield voltage	V_{g_6}	=	2000 ± 200 V 1)
Deflection plate shield voltage	V_{g_5}	=	2000 ± 100 V 1)
Second accelerator voltage	V_{g_4}	=	2000 ± 100 V 1)
Focusing electrode voltage	V_{g_3}	=	220 to 710 V
First accelerator voltage	V_{g_2}	=	2000 V
Grid No.1 voltage	V_{g_1}	=	-60 to -96 V 2)
Deflection factor			
horizontal	M_x	=	21 to 26 V/cm
vertical	M_y	=	5.1 to 6.7 V/cm
Deviation of linearity of deflection		=	max. 2 % 1)3)
Pattern distortion		=	max. 1 % 1)4)
Undeflected spot position	R	=	5 mm5)

1)2)3)4)5) See page 4

PHILIPS

[1]) In general the voltages on g_6, g_5, g_4 and the average potential of the deflection plates should be equal

Variation of the isolation shield voltage V_{g6} (max. ±10 % of V_{g4}) serves to correct pincushion and barrel pattern distortion

Adjustment of the deflection plate shield voltage V_{g5} (max. ±5 % of V_{g4}) provides improved linearity of vertical deflection

A small potential difference (max. ±5 % of V_{g4}) between the y plates and g_4 may be desirable for obtaining optimum sharpness

[2]) For visual extinction of the focused spot

[3]) The sensitivity for a deflection of less than 75% of the useful scan will not differ more than 2 % from the sensitivity for a deflection of 25% of the useful scan

[4]) With a raster pattern the size of which is such that the widest points of the pattern just touch the sides of a rectangle of 100x60 mm, no points of the pattern sides will be within a concentric rectangle of 98x58.5 mm

[5]) With the tube shielded the spot will be within a circle of 5 mm radius, the circle being centered with respect to the tube face

[6]) If use is made of the full deflection capabilities of the tube, the deflection plates will intercept part of the electron beam near the edge of the scan; a low impedance deflection plate drive is therefore desirable

[7]) Values to be taken into account for the calculation of the V_{g3}-potentiometer

LIMITING VALUES (Absolute limits)

Post accelerator voltage	V_{g7}	= max. 8800 V = min. 2500 V
Isolation shield voltage	V_{g6}	= max. 2200 V
Deflection plate shield voltage	V_{g5}	= max. 2200 V
Second accelerator voltage	V_{g4}	= max. 2200 V = min. 1000 V
Focusing electrode voltage	V_{g3}	= max. 1500 V
First accelerator voltage	V_{g2}	= max. 2200 V
Grid No.1 voltage		
negative	$-V_{g1}$	= max. 200 V
positive	$+V_{g1}$	= max. 0 V
peak positive	$+V_{g1\,p}$	= max. 2 V
Ratio V_{g2}/V_{g4}	V_{g2}/V_{g4}	= max. 1
Ratio V_{g7}/V_{g4}	V_{g7}/V_{g4}	= max. 4
Peak voltage between second accelerator and any deflection plate	$V_{g4-x\,p}$ $V_{g4-y\,p}$	= max. 500 V = max. 500 V
Voltage between cathode and heater		
cathode positive	V_{kf}(k pos)	= max. 200 V
cathode negative	V_{kf}(k neg)	= max. 125 V
First accelerator dissipation	W_{g2}	= max. 6 W
Screen dissipation	W_{ℓ}	= max. 3 mW/cm^2

CIRCUIT DESIGN VALUES

Focusing voltage	V_{g3} = 110 to 355 V	per kV of V_{g4}
Grid No.1 voltage [2])	$-V_{g1}$ = 30 to 48 V	per kV of V_{g2}
Deflection factors at V_{g7}/V_{g4} = 2		
horizontal	M_x = 10.5 to 13 V/cm	per kV of V_{g4}
vertical	M_y = 2.55 to 3.35 V/cm	per kV of V_{g4}
Grid No.1 circuit resistance	R_{g1} = max. 1.5 MΩ	
Deflection plate resistance	$R_x = R_y$ = max. 5 MΩ [6])	
Grid No.3 current	I_{g3} = -15 to +10 μA [7])	

[2])[6])[7]) See page 4