INSTRUMENT CATHODE-RAY TUBE

- mono accelerator
- 12 cm diagonal rectangular flat face
- dynamic deflection defocusing correction
- internal magnetic correction for astigmatism, vertical eccentricity and orthogonality
- low heater power consumption
- for portable oscilloscopes with up to 25 MHz bandwidth, and read-out devices

QUICK REFERENCE DATA

Accelerator voltage	$V_{g2,g4,g5(\ell)}$	2000	V
Minimum useful scan area		80 mm x 64	mm
Deflection coefficient			
horizontal	M_x	32	V/cm
vertical	M_y	21	V/cm

OPTICAL DATA

Screen	
type	GY, colour green
persistence	medium
Useful screen area	⩾ 82 mm x 66 mm; note 1
Useful scan area	⩾ 80 mm x 64 mm
Internal graticule	type 119; see Fig. 4

HEATING

Indirect by a.c. or d.c.*

Heater voltage	V_f	6,3 V
Heater current	I_f	0,1 A
Heating time to attain 10% of the cathode current at equilibrium conditions		approx. 7 s

* Not to be connected in series with other tubes.

MECHANICAL DATA

Dimensions and connections (see also outline drawing)

Overall length (socket included)	⩽ 257 mm
Faceplate dimensions	98 ± 0,5 mm x 82 ± 0,5 mm
Net mass	approx. 0,7 kg
Base	12-pin, all glass, JEDEC B12-246

Mounting

The tube can be mounted in any position. It must not be supported by the socket and not by the base region alone. The reference points on adjoining edges of the faceplate (see Fig. 4) enable the tube to be mounted accurately in the front panel, thus providing optimum alignment of the internal graticule.

Accessories

Socket with solder tags	type 55594
Socket with printed-wiring pins	type 55595

FOCUSING	electrostatic
DEFLECTION	double electrostatic
x-plates	symmetrical
y-plates	symmetrical

If use is made of the full deflection capabilities of the tube the deflection plates will block part of the electron beam, hence a low impedance deflection plate drive is desirable.

DYNAMIC DEFLECTION DEFOCUSING CORRECTION

The tube has a special electrode, positioned between the x and y-plates, for dynamic correction of deflection defocusing, to improve the uniformity of the extremely good line width up to the screen edges. If use is made of this dynamic correction, a negative voltage proportional to, and approx. 50% of, the negative horizontal deflection plate voltage should be applied to this electrode (grid 6).
The correction-circuit impedance must be $\leqslant$ 100 kΩ. To prevent distortion, the output impedances of the x-amplifiers should be $\leqslant$ 10 kΩ.
If no correction is required, grid 6 should be connected to mean x-plate potential ($V_{g2(\ell)}$).

CAPACITANCES (approx. values)

x_1 to all other elements except x_2	$C_{x1(x2)}$	4,5 pF
x_2 to all other elements except x_1	$C_{x2(x1)}$	4,5 pF
y_1 to all other elements except y_2	$C_{y1(y2)}$	3,5 pF
y_2 to all other elements except y_1	$C_{y2(y1)}$	3,5 pF
x_1 to x_2	C_{x1x2}	2 pF
y_1 to y_2	C_{y1y2}	1 pF
Control grid to all other elements	C_{g1}	6 pF
Cathode to all other elements	C_k	2,7 pF
Grid 6 to all other elements	C_{g6}	11 pF

DIMENSIONS AND CONNECTIONS

Dimensions in mm

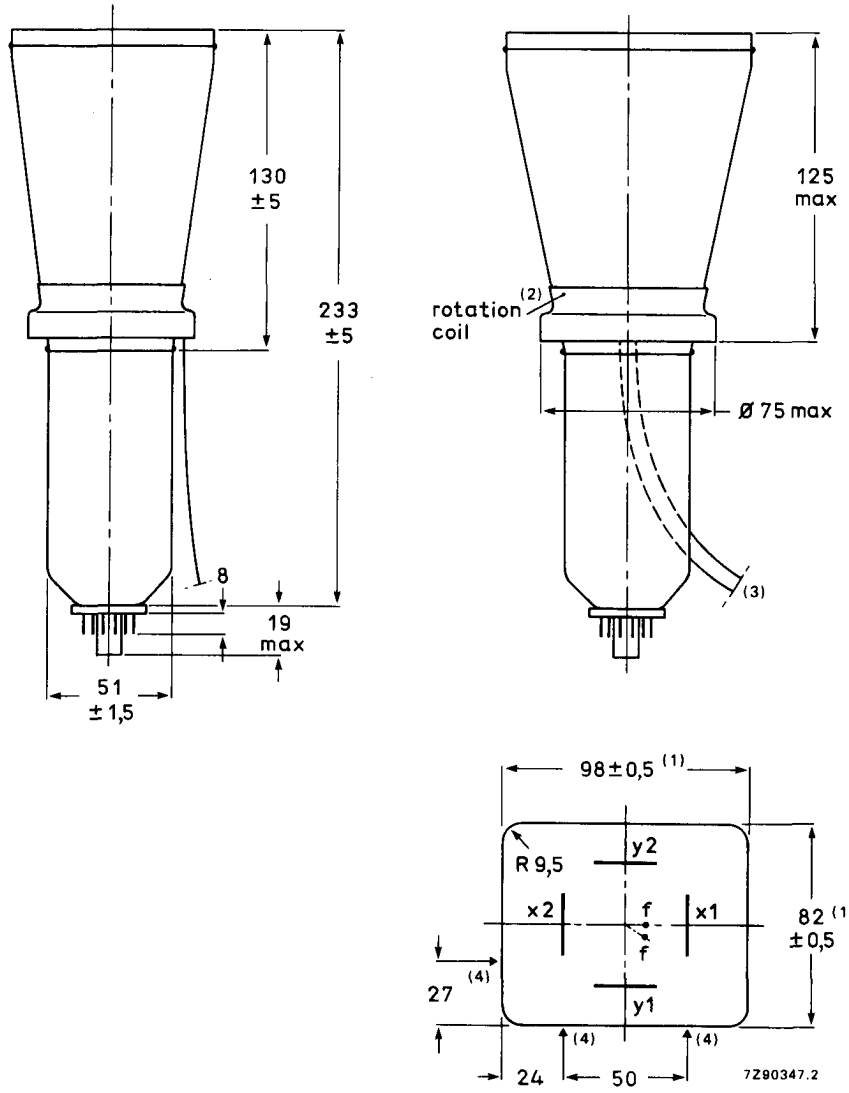

Fig. 1 Outlines.

(1) Dimensions of faceplate only. The complete assembly of faceplate and cone (frit seal included) will pass through an opening of 101 mm x 85 mm.
(2) The coil is fixed to the envelope with resin and adhesive tape.
(3) The length of the connecting leads of the rotation coil is min. 350 mm.
(4) Reference points on faceplate for graticule alignment (see Fig. 4).

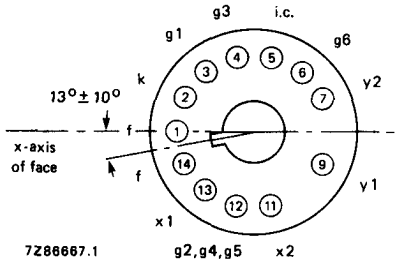

Fig. 2 Pin arrangement; bottom view.

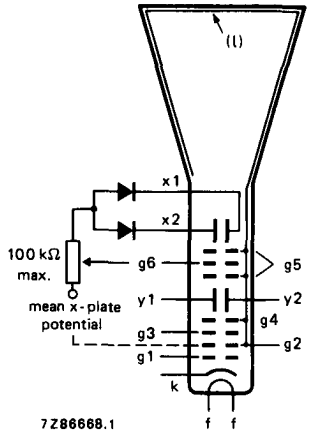

Fig. 3 Electrode configuration.

Internal graticule

The internal graticule is aligned with the faceplate by using the faceplate reference points, see Fig. 4. See also note 1.

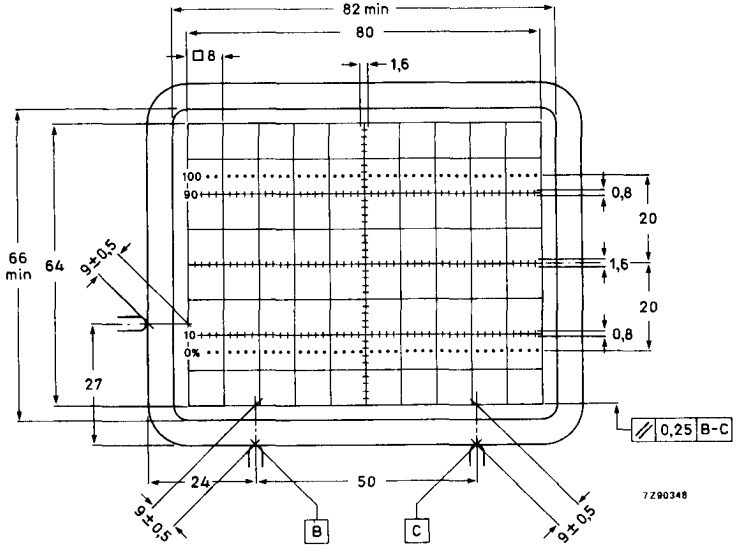

Fig. 4 Front view of tube with internal graticule, type 119.
Line thickness = 0,2 mm;
dot diameter = 0,4 mm;
colour: red.

TYPICAL OPERATION (voltages with respect to cathode)

Conditions					note 2
Accelerator voltage	$V_{g2,g4,g5,(\ell)}$		2000	V	
Astigmatism control voltage	$\Delta V_{g2,g4,g5,(\ell)}$		0	V	note 3
Focusing voltage	V_{g3}		220 to 360	V	note 4
Cut-off voltage for visual extinction of focused spot	$-V_{g1}$		22 to 65	V	note 5
Performance					
Deflection coefficient					
horizontal	M_x		32	V/cm	
		⩽	35	V/cm	
vertical	M_y		21	V/cm	
		⩽	23	V/cm	
Deviation of deflection linearity		⩽	2	%	note 6
Geometry distortion		see note 7			
Eccentricity of undeflected spot with respect to internal graticule					
horizontal		⩽	4	mm	note 3
vertical		⩽	2	mm	note 3
Angle between x and y-traces			90°		note 3
Angle between x-trace and x-axis of the internal graticule		⩽	5°		note 8
Grid drive voltage for 10 μA screen current	V_d	≈	11	V	note 5
Line width	l.w.	≈	0,2	mm	note 9

LIMITING VALUES (Absolute maximum rating system)

Accelerator voltage	$V_{g2,g4,g5,(\ell)}$	max.	2200	V
Focusing voltage	V_{g3}	max.	2200	V
Voltage between accelerator electrode and grid 6	$V_{g2/g6}$	max.	± 500	V
Voltage between accelerator electrode and any deflection plate	$V_{g2/x/y}$	max.	± 500	V
Control grid voltage	$-V_{g1}$	max.	200	V
		min.	0	V
Cathode to heater voltage				
positive	V_{kf}	max.	125	V
negative	$-V_{kf}$	max.	125	V
Heater voltage	V_f	max.	6,6	V
		min.	6,0	V
Grid drive voltage, averaged over 1 ms	V_d	max.	20	V
Screen dissipation	W_ℓ	max.	3	mW/cm²
Control grid circuit resistance	R_{g1}	max.	1	MΩ

NOTES

1. As the frit seal is visible through the faceplate, and not necessarily aligned with the internal graticule, application of an external passe-partout with open area of max. 82 mm x 66 mm is recommended. The internal graticule is aligned with the faceplate by using the faceplate reference points (see Fig. 4).
2. The mean x-plate potential and the mean y-plate potential should be equal to $V_{g2,g4,g5(\ell)}$.
3. The tube features internal magnetic correction for astigmatism, orthogonality and eccentricity calibration. Optimum spot is obtained if $V_{g2,g4,g5(\ell)}$ is equal to mean y-potential.
4. An actual focus range of approx. 50 V should be provided on the front panel. V_{g3} decreases with increasing grid drive (see also Fig. 5).
5. Intensity control on the front panel should be limited to the maximum useful screen current (approx. 80 μA; see also Fig. 5). It is to be adjusted either by the grid drive (up to 30 V) or for maximum acceptable line width. The corresponding cathode current or $I_{g2,g4,g5}$ (up to 500 μA) depend on the cut-off voltage and cannot be used for control settings.
6. The sensitivity at a deflection of less than 75% of the useful scan will not differ from the sensitivity at a deflection of 25% of the useful scan by more than the indicated value.
7. A graticule consisting of concentric rectangles of 80 mm x 64 mm and 78,3 mm x 62,3 mm is aligned with the internal graticule. With optimum trace rotation correction the edges of a raster will fall between these rectangles.
8. The tube has a trace rotation coil, fixed onto the lower cone part. The coil has 1000 turns and a typical resistance of 180 ± 25 Ω at 20 °C, which increases by 0,4%/K for rising temperature. Approx. 6 mA causes 1° trace rotation. Thus maximum required voltage is approx. 12 V for tube tolerances (± 5°) and earth magnetic field with reasonable shielding (± 2°).
9. Measured with the shrinking raster method within the useful scan under typical operating conditions, adjusted for optimum focus and dynamic correction applied.

   As the construction of the tube does not permit a direct measurement of the beam current, this current should be determined as follows:

   a) Under typical operating conditions, apply a small raster display (no overscan), adjust V_{g1} for a beam current of approx. 10 μA and adjust V_{g3} for smallest spot size at the centre of the screen. When measuring the beam current, grid 6 should be connected to g2-potential and the diodes should be disconnected from the x-plates.

   b) Under these conditions, but without raster, the deflection plate voltages should be changed to: $V_{y1} = V_{y2} = 2000$ V; $V_{x1} = 1300$ V; $V_{x2} = 1700$ V, thus directing the total beam current to x_2. Measure the current on x_2 and adjust V_{g1} for $I_{x2} = 10$ μA.

   c) Set again for the conditions under a), without touching the V_{g1} control. The screen current of the resulting raster display is now 10 μA.
   Adjust V_{g3} for optimum focus in the centre of the screen and apply dynamic correction to grid 6 for optimum vertical line width.

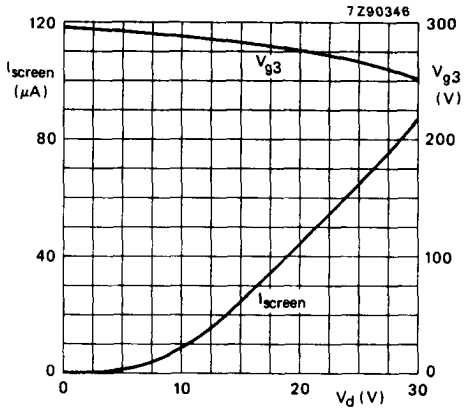

Fig. 5 Screen current (I_{screen}) and focusing voltage (V_{g3}) as a function of grid drive voltage (V_d); typical curves.