INSTRUMENT CATHODE-RAY TUBE

12 cm diagonal rectangular flat-faced oscilloscope tubes with mesh and metal-backed screen with internal graticule. For use in compact oscilloscopes.

QUICK REFERENCE DATA

Final accelerator voltage	$V_{g8(\ell)}$	10 kV
Minimum useful scan area		80 mm x 64 mm
Deflection coefficient		
horizontal	M_x	15,6 V/div
vertical	M_y	4,1 V/div

OPTICAL DATA

Screen	metal-backed phosphor
type	GH, colour green
persistence	medium short
Useful screen area	⩾ 80 mm x 64 mm
Useful scan area	⩾ 80 mm x 64 mm
Spot eccentricity in horizontal and vertical directions	⩽ 0,6 div
Internal graticule	type 115; see Fig. 5

HEATING

Indirect by AC or DC*

Heater voltage	V_f	6,3 V
Heater current	I_f	0,1 A

* Not to be connected in series with other tubes.

MECHANICAL DATA

Dimensions and connections (see also outline drawing)

Overall length (socket included)	⩽ 335 mm
Faceplate dimensions	86 ± 2 mm x 98 ± 2 mm
Net mass	approx. 700 g
Base	14 pin, all glass

Mounting

The tube can be mounted in any position. It should not be supported by the base alone and under no circumstances should the socket be allowed to support the tube.

Accessories

Socket, supplied with tube	type 55566
Side contact connector (5 required)	type 55561
Final accelerator contact connector	type 55563A

FOCUSING

electrostatic

DEFLECTION

	double electrostatic
x-plates	symmetrical
y-plates	symmetrical
Angle between x and y-traces	90 ± 1°
Angle between x-trace and x-axis of the internal graticule	⩽ 5° *

If use is made of the full deflection capabilities of the tube the deflection plates will block part of the electron beam, hence a low impedance deflection plate drive is desirable.

CAPACITANCES

x_1 to all other elements except x_2	$C_{x1(x2)}$	5,3 pF
x_2 to all other elements except x_1	$C_{x2(x1)}$	5,3 pF
y_1 to all other elements except y_2	$C_{y1(y2)}$	3,6 pF
y_2 to all other elements except y_1	$C_{y2(y1)}$	3,6 pF
x_1 to x_2	C_{x1x2}	2,1 pF
y_1 to y_2	C_{y1y2}	1,7 pF
Control grid to all other elements	C_{g1}	5,5 pF
Cathode to all other elements	C_k	4,5 pF

* The tube has a rotation coil, concentrically wound around the tube neck, to allow alignment of the x-trace with the mechanical x-axis of the screen. The coil has 1000 turns and a maximum resistance of 150 Ω. Under typical operating conditions, approx. 50 ampere-turns are required for the maximum rotation of 5°.

DIMENSIONS AND CONNECTIONS

Dimensions in mm

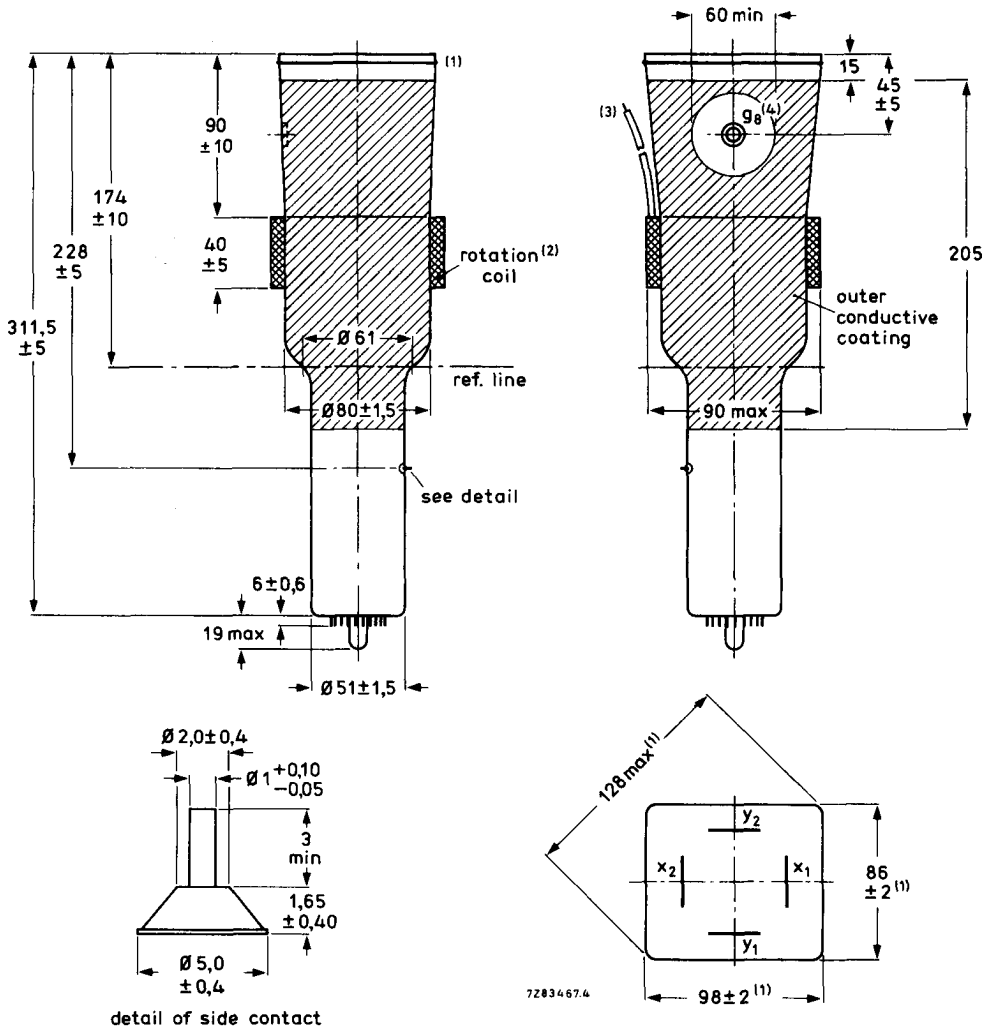

(1) The bulge at the frit seal may increase the indicated maximum dimensions by not more than 2,8 mm.

(2) The coil is fixed to the envelope by means of adhesive tape.

(3) Connection cable, comprising two wires for connection of the rotation coil, and one green wire for earthing the outer conductive coating. Minimum cable length is 120 mm.

(4) The centre of the final accelerator contact is situated within a square of 10 mm x 10 mm around the true geometrical position.

Fig. 1 Outlines.

DIMENSIONS AND CONNECTIONS (continued)

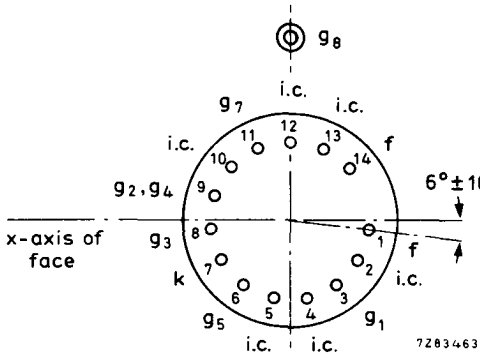

Fig. 2 Pin arrangement; bottom view.

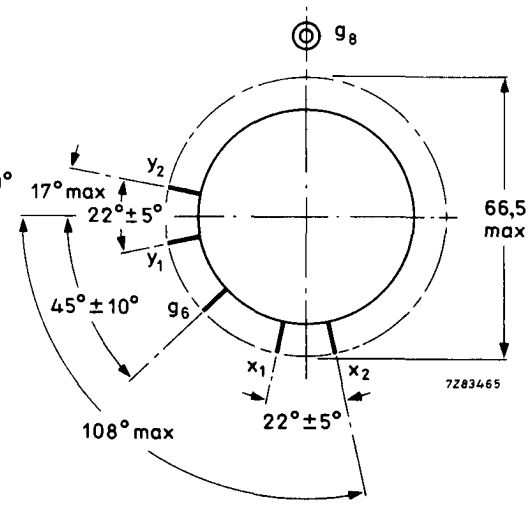

Fig. 3 Side-contact arrangement; bottom view.

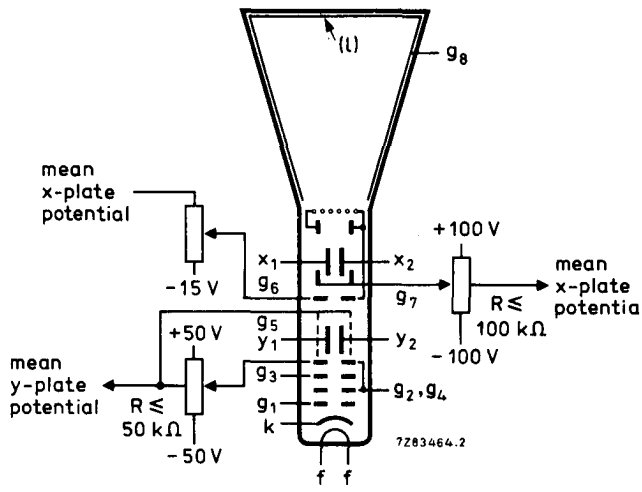

Fig. 4 Electrode configuration.

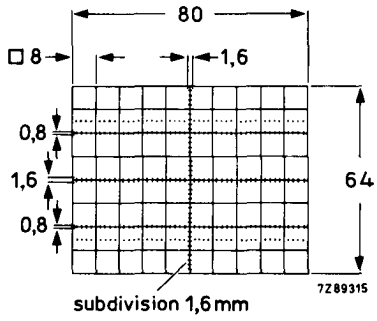

Fig. 5 Internal graticule.
Line width = 0,15 mm;
dot diameter = 0,32 mm.

TYPICAL OPERATION

Conditions

Final accelerator voltage	$V_{g8(\ell)}$		10 kV	
Geometry control electrode voltage	V_{g7}		1500 ± 100 V	see note 1
Post deflection shield and interplate shield voltage	V_{g6}		1500 V	
Background illumination control voltage	ΔV_{g6}		0 to −15 V	see note 1
Deflection plate shield voltage	V_{g5}		1500 V	see note 2
Focusing electrode voltage	V_{g3}		250 to 350 V	
First accelerator voltage	$V_{g2,g4}$		1500 V	
Astigmatism control electrode voltage	$\Delta V_{g2,g4}$		± 50 V	see note 3
Cut-off voltage for visual extinction of focused spot	$-V_{g1}$		18 to 60 V	

Performance

Useful scan				
horizontal		⩾	80 mm	
vertical		⩾	64 mm	
Deflection coefficient				
horizontal	M_x		15,6 V/div	
		⩽	17 V/div	
vertical	M_y		4,1 V/div	
		⩽	4,5 V/div	
Line width	l.w.	typ.	0,35 mm	see note 4
Grid drive for 10 μA screen current	V_d	approx.	12 V	
Geometry distortion		see note 5		
Deviation of deflection linearity		⩽ 2%; see note 6		

LIMITING VALUES (Absolute maximum rating system)

Final accelerator voltage	$V_{g8(\ell)}$	max.	11	kV
Geometry control electrode voltage	V_{g7}	max.	2200	V
Post deflection shield and inter-plate shield voltage	V_{g6}	max.	2200	V
Deflection plate shield voltage	V_{g5}	max.	2200	V
Focusing electrode voltage	V_{g3}	max.	2200	V
First accelerator and astigmatism voltage	$V_{g2,g4}$	max.	2200	V
		min.	1350	V
Control grid voltage	$-V_{g1}$	max.	200	V
		min.	0	V
Cathode to heater voltage				
positive	V_{kf}	max.	100	V
negative	$-V_{kf}$	max.	15	V
Voltage between astigmatism control electrode and any deflection plate	$V_{g4/x}$	max.	500	V
	$V_{g4/y}$	max.	500	V
Grid drive, averaged over 1 ms	V_d	max.	20	V
Screen dissipation	W_ℓ	max.	8	mW/cm²
Control grid circuit resistance	R_{g1}	max.	1	MΩ

Notes

1. The tube is designed for optimum performance when operating at a ratio $V_{g8(\ell)}/V_{g2,g4} = 6{,}7$. The geometry control electrode voltage V_{g7} should be adjusted within the indicated range (values with respect to the mean x-plate potential).
   A negative control voltage V_{g6} (with respect to the mean x-plate potential) will cause some pincushion distortion and less background light, a positive control voltage will give some barrel distortion, and a slight increase of background light. By the use of the two voltages V_{g6} and V_{g7}, the best compromise between background light and raster distortion can be found.
2. The deflection plate shield voltage should be equal to the mean y-plate potential. The mean x-plate and y-plate potentials should be equal for optimum spot quality.
3. The astigmatism control electrode voltage should be adjusted for optimum spot shape. For any necessary adjustment its potential will be within the stated range.
4. Measured with the shrinking raster method in the centre of the screen, under typical operating conditions, adjusted for optimum spot size, at a beam current of 10 μA.
5. A graticule consisting of concentric rectangles of 80 mm x 64 mm and 78,2 mm x 62,6 mm is aligned with the electrical x-axis of the tube. With optimum corrections applied, the edges of a raster will fall between these rectangles.
6. The sensitivity at a deflection of less than 75% of the useful scan will not differ from the sensitivity at a deflection of 25% of the useful scan by more than the indicated value.