OSCILLOSCOPE TUBE with flat face, post deflection acceleration by means of a helical electrode and all glass base

SCREEN

Type	Fluorescence	Phosphorescence	Persistence
D10-12BE	Blue	Blue	Medium short
D10-12GH	Green	Green	Medium short
D10-12GL	Yellowish green	Yellowish green	Medium short
D10-12GM	Purplish blue	Yellowish green	Long

Useful screen diameter 90 mm

Useful scan at $V_{g6}/V_{g4} = 4$

in the x direction full scan

in the y direction 60 mm

The useful scan may vertically be shifted max. 4 mm with respect to the geometric centre of the face plate

For further screen properties please refer to front of this section

HEATING

Indirect by A.C. or D.C.; parallel supply

Heater voltage $V_f = 6.3$ V

Heater current $I_f = 0.3$ A

CAPACITANCES

Grid No.1 to all other electrodes	C_{g_1}	=	4.0 pF
Cathode to all other electrodes	C_k	=	3.0 pF
x_1 plate to all other electrodes except x_2 plate	C_{x_1}	=	4.0 pF
x_2 plate to all other electrodes except x_1 plate	C_{x_2}	=	4.0 pF
y_1 plate to all other electrodes except y_2 plate	C_{y_1}	=	3.0 pF
y_2 plate to all other electrodes except y_1 plate	C_{y_2}	=	3.0 pF
x_1 plate to x_2 plate	$C_{x_1-x_2}$	=	2.0 pF
y_1 plate to y_2 plate	$C_{y_1-y_2}$	=	1.7 pF

PHILIPS

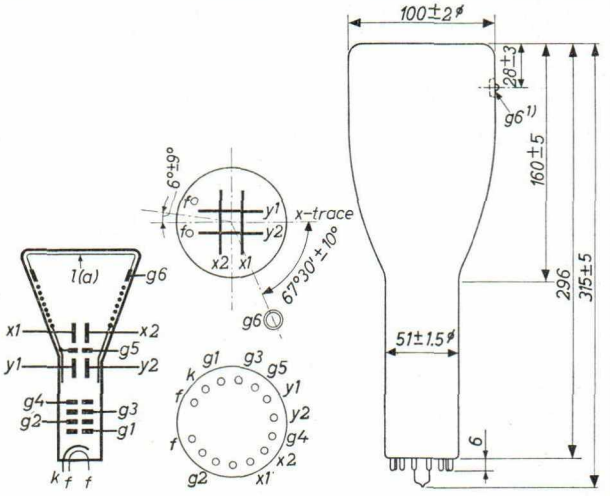

Dimensions in mm

Base: 14 p. all glass

g_5 = isolation shield

The post accelerator helix is connected between g_6 and g_5
The resistance of the helix is min. 50 MΩ

MOUNTING POSITION: any

The tube should not be supported by the base alone

ACCESSORIES

Socket	55566
Mu-metal shield	55541

NET WEIGHT 660 g

1) Recessed small ball cap

FOCUSING	electrostatic
DEFLECTION	double electrostatic
x plates	symmetrical
y plates	symmetrical

Angle between x and y traces $90^{\circ} \pm 1^{\circ}$

LINE WIDTH

Post accelerator voltage	V_{g6}	=	4000 V
Grid No.4 voltage	V_{g4}	=	1000 V
Grid No.2 voltage	V_{g2}	=	1000 V
Beam current	I_{ℓ}	=	10 μA
Line width	l.w.	=	0.35 mm

OPERATING CHARACTERISTICS

Post accelerator voltage	V_{g6}	=	4000 V
Isolation shield voltage	V_{g5}	=	1000 ± 100 V [1]
Second accelerator voltage	V_{g4}	=	1000 ± 50 V [1]
Focusing electrode voltage	V_{g3}	=	20 to 200 V
First accelerator voltage	V_{g2}	=	1000 V
Grid No.1 voltage	V_{g1}	=	-25 to -67 V [2]
Deflection factor			
horizontal	Mx	= max.	31 V/cm
vertical	My	= max.	11.2 V/cm
Deviation of linearity of deflection		= max.	2 % [1][3]
Pattern distortion		= max.	2 % [1][4]
Undeflected spot position	R	=	5 mm [5]

[1][2][3][4][5] See page 4

[1]) In general the voltages on g_5,g_4 and the average potential of the deflection plates should be equal

Variation of the isolation shield voltage (max. 10% of V_{g_4}) serves to correct pincushion and barrel pattern distortion

A small potential difference (max. ± 5% of V_{g_4}, obtained by varying V_{g_4}) between the y plates and g_4 may be desirable for obtaining optimum sharpness

[2]) *For visual extinction of the focused spot*

[3]) The sensitivity (of both x and y plate pairs separately) for a deflection of less than 75% of the useful scan will not differ more than 2% from the sensitivity for a deflection of 25% of the useful scan

[4]) With a vertical or horizontal line which is adjusted so that the centre of the line touches the sides of a square of 51 mm, no points of the centre of the line will be within a concentric square of 49 mm

[5]) With the tube shielded the spot will be within a circle of 5 mm radius, the circle being centered with respect to the tube face

[6]) If use is made of the full deflection capabilities of the tube, the deflection plates will intercept part of the electron beam near the edge of the scan; a low impedance deflection plate drive is therefore desirable

[7]) Values to be taken into account for the calculation of the V_{g_3}-potentiometer

LIMITING VALUES (Absolute limits)

Post accelerator voltage	V_{g6}	= max. 5000 V = min. 1500 V
Isolation shield voltage	V_{g5}	= max. 2200 V
Second accelerator voltage	V_{g4}	= max. 2200 V = min. 1000 V
Focusing electrode voltage	V_{g3}	= max. 1500 V
First accelerator voltage	V_{g2}	= max. 2200 V = min. 1000 V
Grid No.1 voltage		
negative	$-V_{g1}$	= max. 200 V
positive	$+V_{g1}$	= max. 0 V
peak positive	$+V_{g1p}$	= max. 2 V
Ratio V_{g6}/V_{g4}	V_{g6}/V_{g4}	= max. 4
Peak voltage between second accelerator and any deflection plate	V_{g4}-x p V_{g4}-y p	= max. 500 V = max. 500 V
Voltage between cathode and heater		
cathode positive	V_{kf}(k pos)	= max. 200 V
cathode negative	V_{kf}(k neg)	= max. 125 V
Accelerator grids dissipation	$W_{g2,g4}$	= max. 6 W
Screen dissipation	W_{ℓ}	= max. 3 mW/cm^2

CIRCUIT DESIGN VALUES

Focusing voltage	V_{g3} = 50 to 200 V	per kV of $V_{g2,g4}$
Grid No.1 voltage [2]	$-V_{g1}$ = 25 to 67 V	per kV of V_{g2}
Deflection factors at $V_{g6}/V_{g2,g4}$ = 4		
horizontal	Mx = max. 31 V/cm	per kV of V_{g4}
vertical	My = max. 11.2 V/cm	per kV of V_{g4}
Grid No.1 circuit resistance	R_{g1} = max. 1.5 MΩ	
Deflection plate resistance	$R_x = R_y$ = [6]	
Grid No.3 current	I_{g3} = -30 to +10 μA [7]	

[2] [6] [7] See page 4