G.E.C. VALVES

PACKAGED X-BAND PULSED MAGNETRONS

CV6034 CV6035 CV6036

ISSUE 1

The CV6034, 5 and 6 are forced air cooled packaged magnetrons with indirectly heated cathodes and waveguide outputs. They differ only in frequency range as follows:

CV6034	9500 - 9590	Mc/s
CV6035	9555 - 9645	Mc/s
CV6036	9610 - 9700	Mc/s

HEATER

V_h	2.0	V
I_h	10.5 (approx)	A

For a mean anode input power greater than 50W the heater voltage must be reduced in accordance with the formula:

$$V_h = 2\ (1 - \frac{\text{mean power input}}{300})\ \pm 0.2V$$

MAXIMUM RATINGS (Absolute)

V_a (pk)	18.0	kV
i_a (pk)	20.0	A
t_p (max)	1.0	μs
t_p (min)	0.25	μs
DF	0.001	-
*Rate of rise of voltage (max)	250	kV/μs
*Rate of rise of voltage (min)	100	kV/μs
$t_{h,k}$ (min)	3.0	minutes
VSWR (load)	1.5 : 1	-
P_{in} (mean)	360	W
P_{in} (pk) (for t_p = 0.25μs)	360	kW
(for t_p = 1.0μs)	200	kW
Output waveguide pressurising	40	lb/in^2
$T_{anode\ block}$ (max)	150	°C
$T_{anode\ block}$ (min)	-55	°C
$T_{cathode\ connector}$ (max)	165	°C
$T_{cathode\ connector}$ (min)	-55	°C
Altitude	10,000	ft

*Rate of rise of applied voltage is defined here as the value of $\frac{dv_a}{dt}$ between 80% and 100% of the peak amplitude of the voltage pulse.

CHARACTERISTICS

Pulling figure (max) (VSWR = 1.5 : 1)	15	Mc/s
Efficiency into matched load (min)	30	%
$C_{h,k-a}$	12	pF

TYPICAL OPERATION FOR CV6035

f	9600	9600	Mc/s
t_p	0.25	1.0	μs
PRF	4000	1000	p/s
$i_{a(pk)}$	20	12	A
$v_{a(pk)}$ (approx)	17.2	16.7	kV
*Rate of rise of voltage	250	250	kV/μs
$P_{out(pk)}$	130	75	kW
Efficiency (approx)	38	38	%
Bandwidth (to $\frac{1}{4}$ power points)	5.5	1.4	Mc/s
Stability (missing pulses)	0.1	0.1	%
Minor lobes	-12	-10	dB
Pushing figure	0.2	0.2	$Mc/s(A)^{-1}$

*Rate of rise of applied voltage is defined here as the value of $\frac{dv_a}{dt}$ between 80% and 100% of the peak amplitude of the voltage pulse.

INSTALLATION

The valve may be mounted in any position.

The r.f. output is by standard waveguide WG16 (0.4 x 0.9 in. i.d.) to connect to a suitable square choke flange.

The valve must be forced air cooled at 15 c.f.m. through the cooling duct, so that the maximum temperature ratings are not exceeded.

The total weight of the valve is about $7\frac{1}{2}$ lb.

As there is a strong magnetic field in the vicinity of the valve, care must be taken to keep magnetic materials at least two inches away from it.

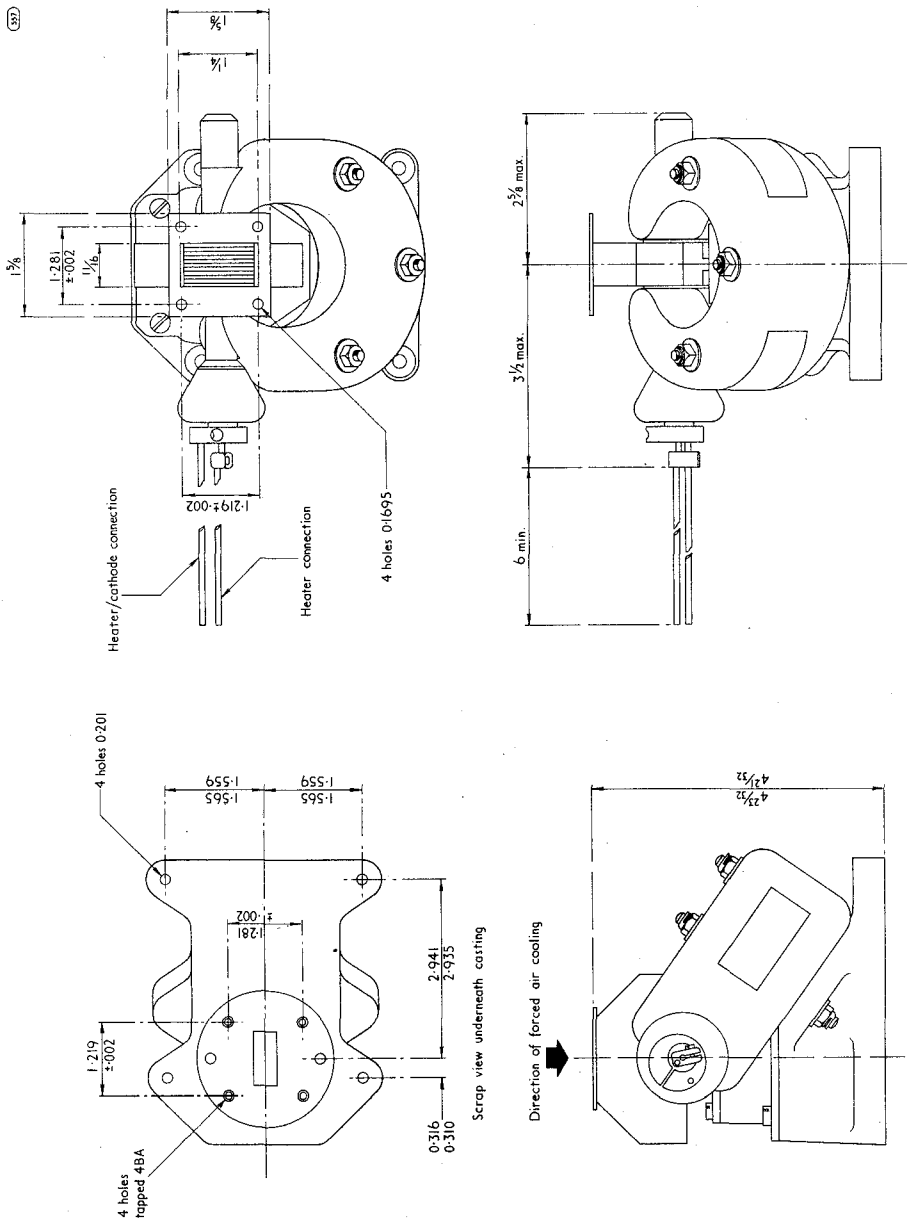

All dimensions are in inches