CO.80 CARCINOTRON

The CO. 80 is a millimetric backward wave oscillator, delivering an output power of 10 to 30 watts over a frequency range of 39.5 to 40.5 gigahertz.

It can be amplitude modulated through its anode. Frequency modulation can be obtained by line voltage (1) variation, the frequency being independent of the load up to a VSWR of 3 : 1.

It is focused by an integral permanent magnet, and cooled by water circulation.

The relatively high power obtained at very high frequency makes it particularly suitable for physical measurements such as plasma analysis, parametric resonance, study of the fine structure of the matter. It can be used also for transmission measurements, scaling, etc ....

In short, the main features of the CO. 80 are :

- Minimum output power : 10 W from 39.5 to 40.0 GHz
  30 W from 40.0 to 40.5 GHz

- Frequency and amplitude modulation.

(1) line voltage or beam voltage.

GENERAL CHARACTERISTICS

Electrical

	min.	max.	
Frequency	39.5	40.5	GHz
Heater voltage	7.1	7.8	V
Heater current	2.0	2.3	A
Wehnelt (2) voltage	0	-40	V
Wehnelt current	0	2	mA
Anode (3) voltage for 60 mA line current	1000	1500	V
Anode voltage for 80 mA line current	1500	1800	V
Anode current	0	5	mA
Line voltage (at lower frequencies)	3000	-	V
Line voltage (at higher frequencies)	-	6500	V
Line current	60	80	mA
Modulation sensitivity	0.5	1.5	MHz/V
Pushing	5	10	MHz/mA

(2) Wehnelt or Focusing electrode.
(3) Anode or Accelerator.

THOMSON-CSF
GROUPEMENT TUBES ELECTRONIQUES

Mechanical

Operating position...	horizontal	RF output flange ...	UG 383/U
Focusing	permanent magnet	Input connector	see drawing
RF output waveguide	RG 97/U	Weight	16 kg

Cooling

Inlet water temperature	max.	60	°C	Corresponding pressure drop	0.3 to 0.5	bar	
Inlet pressure	max.	1.5	bar	Ambiant temperature max.	60	°C	
Flow-rate	1 to 1.5	l/mn		Water interlock	supplied with the tube		

ABSOLUTE RATINGS (1)

Heater voltage	min.	6.8	V				
	max.	8.5	V	Wehnelt current.....	max.	5	mA
Heater current.....	min.	1.9	A	Anode voltage.....	max.	3000	V
	max.	2.5	A	Anode current	max.	10	mA
Surge current.....	max.	2.5	A	Line voltage	max.	7000	V
Warm-up time	min.	4	mn	Line current.....	max.	80	mA
Wehnelt voltage	max.	300	V	Load VSWR.....	max.	5:1	

TYPICAL OPERATION (1)

				Frequency	39.72	40.26	GHz
				Line voltage	5116	5810	V
Heater voltage	7.7	V		Line current	80	80	mA
Heater current.....	2.2	A		Anode voltage.....	1680	1680	V
Warm-up time	4	mn		Anode current	0	0	mA
				Wehnelt voltage ..	-10	-10	V
				RF output power	see curves		

(1) All voltages are referred to the cathode

The tube can be operated beyond characteristic frequency range. Ask for information.

OPERATING INSTRUCTIONS

Supply : (see diagram)

The supply should feature

- the following starting sequence : Heater, Wehnelt, Line, Anode.
- Current limitations : Heater ..... 2.5 A
  Wehnelt ..... 5 mA
  Anode ..... 5 mA
  Line ..... 80 mA

- Protection against shorts or flashes which could occur in the tube.
- Warm-up timing
- External water interlock for cooling circuit
- Line overvoltage (line voltage $\geqslant$ Anode voltage + 1500 V) security device.

Application of voltages

- Start the liquid flow through the cooling circuit.
- Apply voltages in the following order : heater (allow four minutes minimum cathode warm-up time), Wehnelt, line, anode.

Protective measures

- A minimum distance of 25 cm should be kept between the tube and any magnetic material.
- Do not try to obtain modulation through the Wehnelt voltage.
- Operating parameters are given in each tube test data sheets, and are always within the absolute ratings indicated here.

CHARACTERISTIC CURVES

Heater voltage (dc)	7.7 V
Heater current (dc)	2.2 A
Wehnelt voltage (dc)	-10 V
Anode voltage (dc)	1680 V
Line current (dc)	80 mA

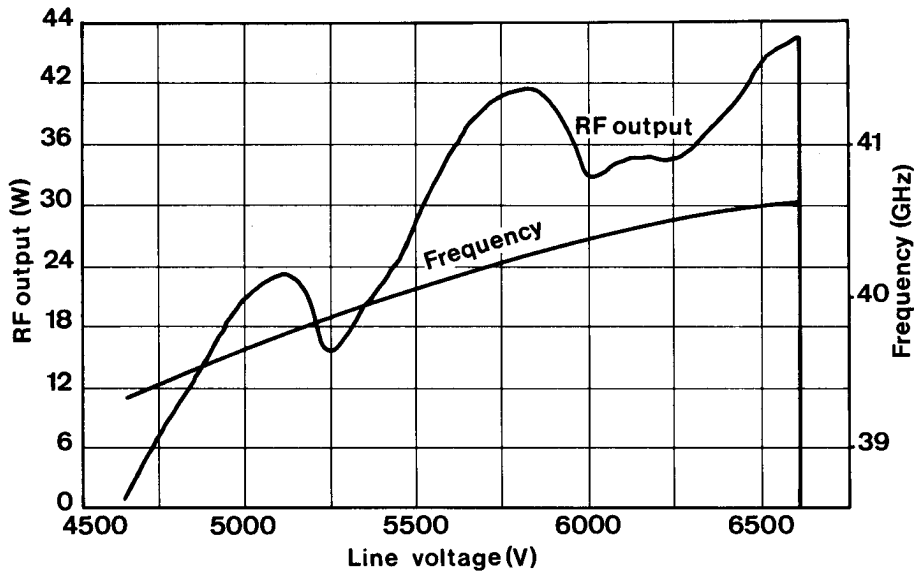

Heater voltage (dc)	7.7 V
Heater current (dc)	2.2 A
Wehnelt voltage (dc)	- 10 V
Line voltage (dc)	4 kV

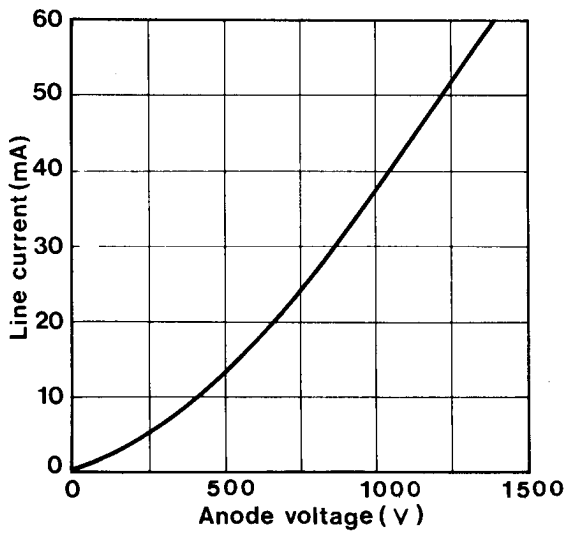

SUPPLY DIAGRAM

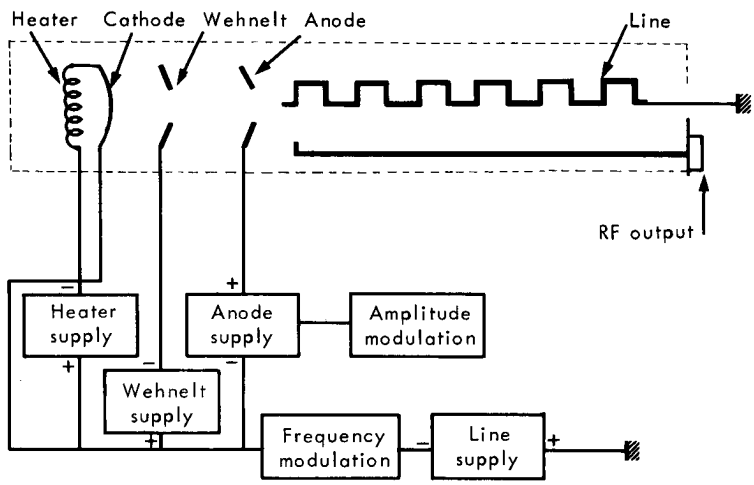

THOMSON-CSF
GROUPEMENT TUBES ELECTRONIQUES

OUTLINE DRAWING

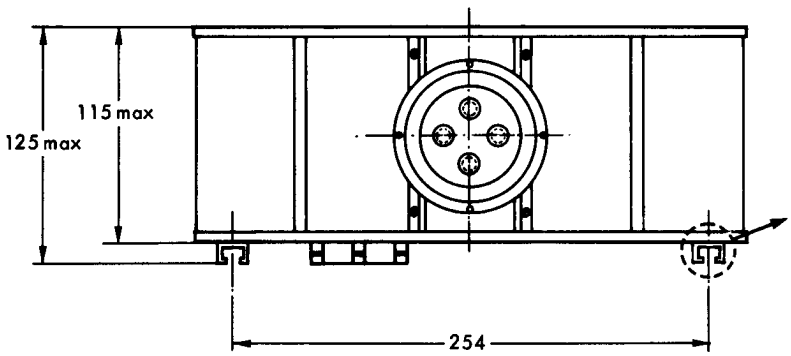

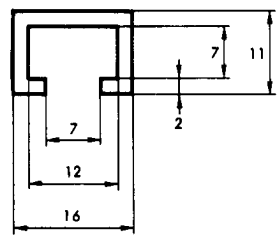

Positioning rail

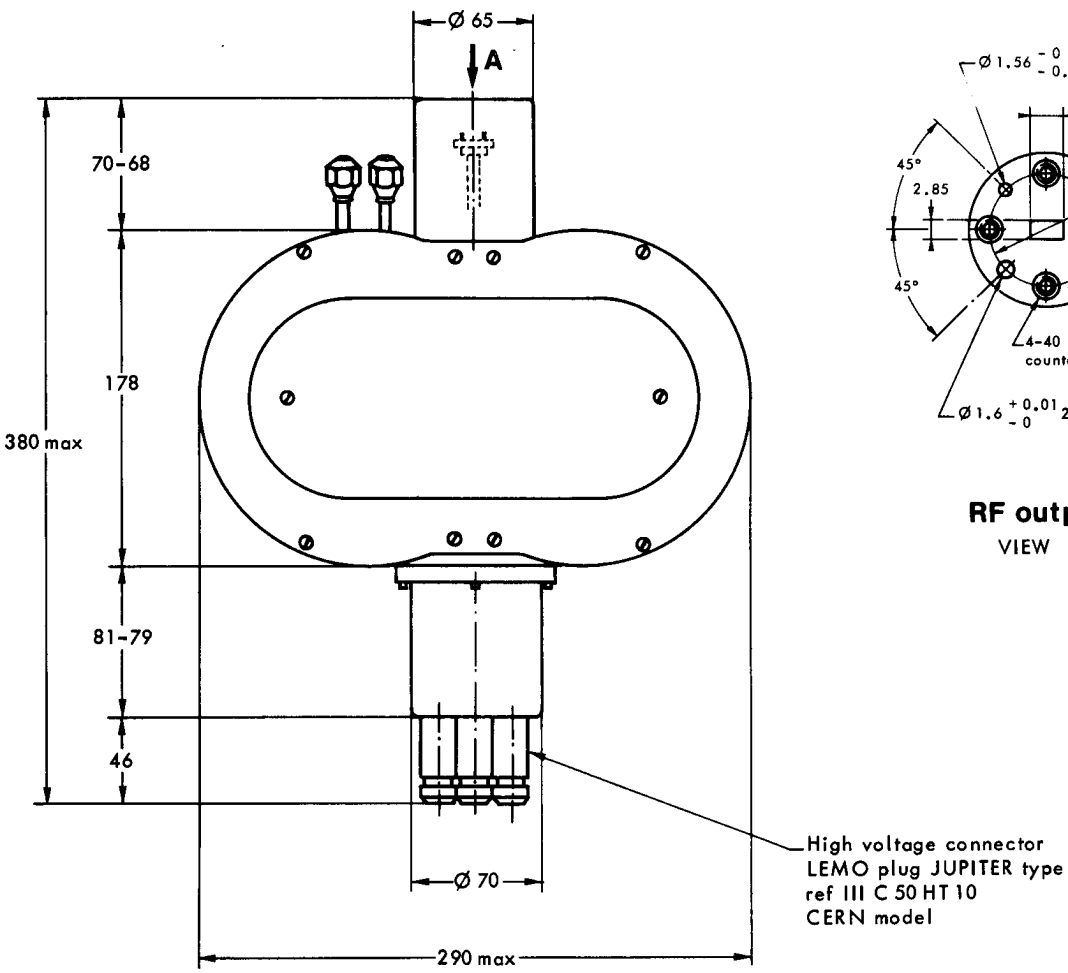

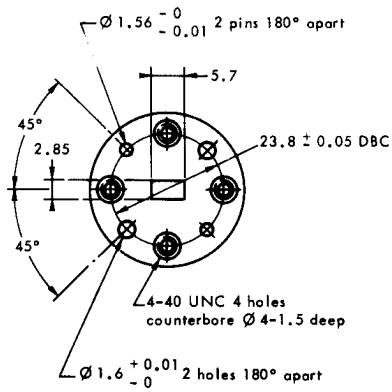

RF output
VIEW A

Dimensions in mm.