CO.10 CARCINOTRON

The CO.10 is a millimetric backward wave oscillator, focused by an integral permanent magnet, water cooled and delivering an output power over a frequency range of 285 to 305 GHz.

It can be amplitude modulated through its anode. Frequency modulation can be obtained by line voltage (1) variation, the frequency being independent of the load up to a VSWR of 3 : 1.

The high power obtained at such a high frequency makes it particularly suitable for physical measurements as plasma analysis, parametric resonance, study of the fine structure of the matter. It can be used also for transmission measurements, scaling, etc . . .

In short, the main features of the CO. 10 are :

- Minimum output power : 10 mW from 285 GHz to 305 GHz
  60 mW in one point at least between 290 and 310 GHz.
- Frequency and amplitude modulation.

(1) Line voltage or beam voltage.

GENERAL CHARACTERISTICS

Electrical

	min.	max.	
Frequency	285	305	GHz
Heater voltage (d c)	− 8	− 6	V
Heater current (d c)	1. 8	2. 4	A
Wehnelt (2) voltage	− 250	0	V
Wehnelt current	0	2	mA
Anode (3) voltage for 60 mA line current	1600	2500	V
Anode voltage for 40 mA line current	1000	2000	V
Anode current	0	5	mA
Line voltage (at lower frequencies)	3000	–	V
Line voltage (at higher frequencies)	–	6000	V
Line current	–	60	mA
Modulation sensitivity	5	40	MHz/V
Pushing	50	100	MHz/mA

(2) Wehnelt or Focusing electrode.
(3) Anode or Accelerator.

THOMSON-CSF
GROUPEMENT TUBES ELECTRONIQUES

MECHANICAL

Operating position	horizontal	RF output flange	UG 387/U
Focusing	permanent magnet	Input connector	HT plug (see drawing)
RF output waveguide	RG 138/U	Weight	16 kg

COOLING

Inlet water temperature	max.	60	°C	Corresponding pressure drop	0. 3 to 0. 5	bar
Inlet pressure	max.	1. 5	bar	Ambient temperature max.	60	°C
Flow-rate		1 to 1. 5	l/mn	Water interlock	supplied with the tube	

ABSOLUTE RATINGS (1)

Heater voltage		Vnom ± 3 %		Anode voltage	max.	3 000	V
Surge current	max.	2. 5	A	Anode current	max.	10	mA
Warm-up time	min.	4	mn	Line voltage	max.	7 000	V
Wehnelt voltage	max.	0	V	Line current	max.	80	mA
Wehnelt current	max.	5	mA	Load VSWR	max.	5 : 1	

TYPICAL OPERATION (1)

Heater voltage	− 7. 5	V	Frequency	301	305	GHz
Heater current	2. 15	A	Line voltage	4 600	4 950	V
Warm-up time	4	mn	Line current	60	60	mA
			Anode voltage	1 880	1 880	V
			Anode current	0	0	mA
			Wehnelt voltage	− 50	− 50	V
			RF output power	see curves		

(1) All voltages are referred to the cathode.

The tube can be operated beyond characteristic frequency range. Ask for information.

OPERATING INSTRUCTIONS

Supply (see diagram) :

The supply should meet following items :

- the following starting sequence : Heater, Wehnelt, Line, Anode.
- Current limitations : Heater 2. 5 A
  Wehnelt 5 mA
  Anode 5 mA
  Line 80 mA
- Protection against shorts or flashes which could occur in the tube.
- Warm-up timing.
- External water interlock for cooling circuit.
- Line overvoltage (Line voltage ⩾ Anode voltage +1500 V) security device.

Application of voltages :

- Start the liquid flow through the cooling circuit.
- Apply voltages in the following order : heater (allow four minutes minimum cathode warm-up time), Wehnelt,line, anode.

Protective measures :

- A minimum distance of 25 cm should be kept between the tube and any magnetic material.
- Do not try no obtain modulation through the Wehnelt voltage.
- Operating parameters are given with each tube particular test data sheets.

characteristic curves
(typical values)

Heater voltage (dc)	- 7.5 V
Heater current (dc)	2.1 A
Wehnelt voltage (dc)	- 50 V
Anode voltage (dc)	1880 V
Line current (dc)	60 mA

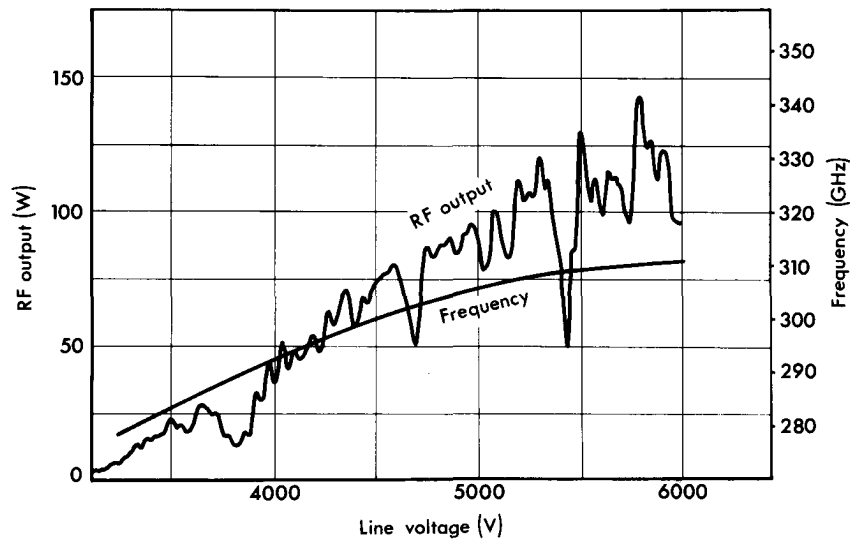

Heater voltage (dc)	- 7.5 V
Heater current (dc)	2.1 A
Wehnelt voltage (dc)	- 50 V
Line voltage (dc)	4 kV

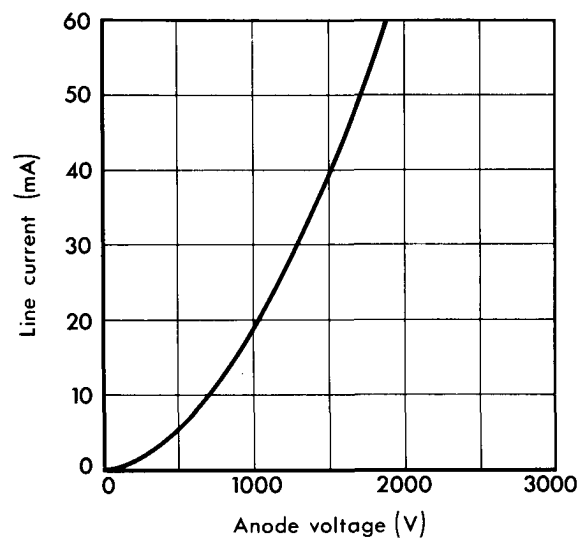

supply diagram

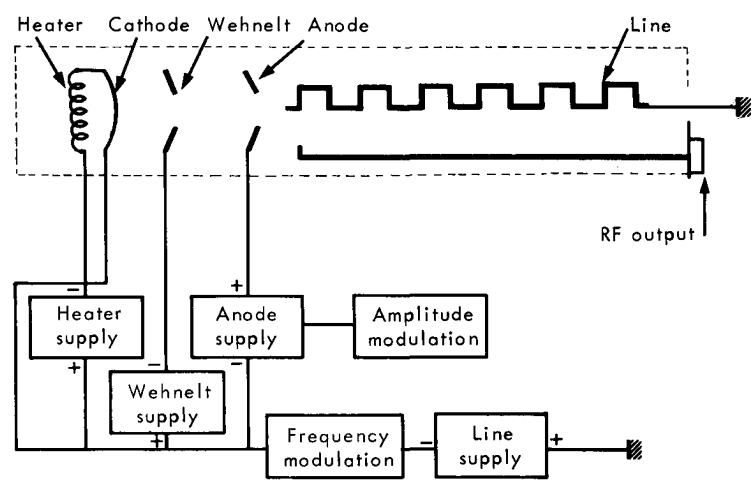

THOMSON-CSF
GROUPEMENT TUBES ELECTRONIQUES

OUTLINE DRAWING

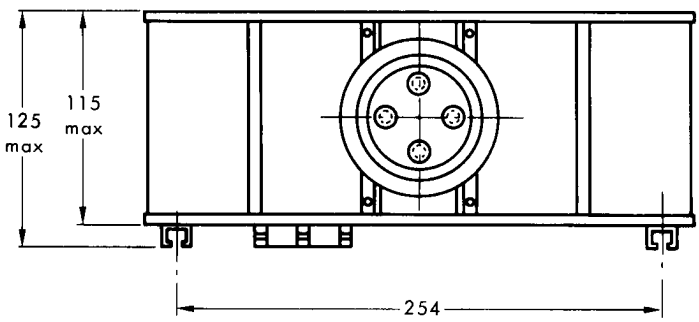

POSITIONING RAIL

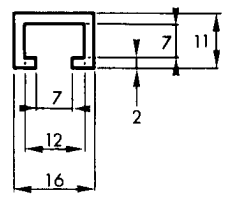

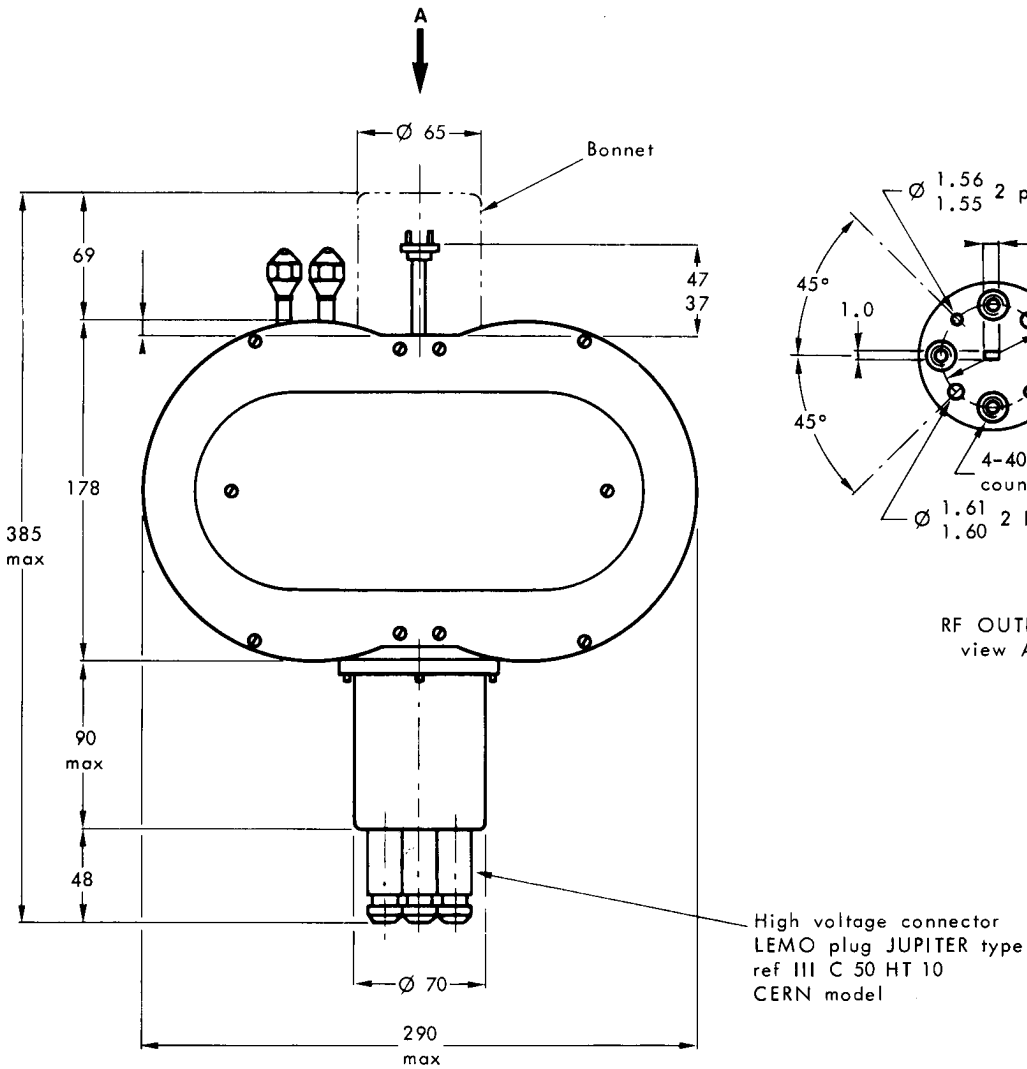

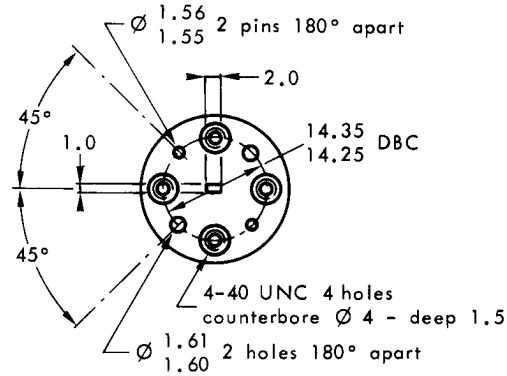

RF OUTPUT
view A

Dimensions in mm.