CMA 1290 CARCINOTRON

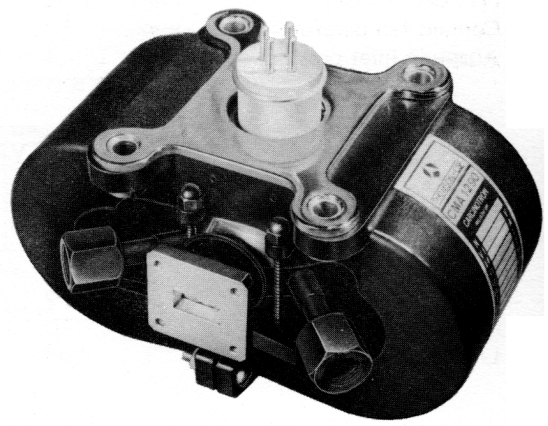

The CMA 1290 is a rugged, compact, electronically tunable, crossfield, backward wave oscillator. Its light weight makes it suitable for airborne equipments. Sturdy metal-ceramic construction insures reliable performance in spite of severe environmental conditions.

This M type carcinotron provides an output of at least 100 W over the frequency range of 15.4 to 17.6 GHz. The tube tunes over the entire frequency range by changing the line or sole voltage.

It can be amplitude modulated through its anode. Frequency modulation can be obtained by line or sole voltage variations.

The CMA 1290 uses integral permanent magnet focusing. Liquid cooling insures reliable operation in a wide temperature range.

In short, the principal features of the CMA 1290 are :

- Wide tuning range	15.4 to 17.6	GHz
- Nominal output power	130	W
- Light weight	3.6	kg

GENERAL CHARACTERISTICS

Electrical

Heater voltage	6.3	V
Heater current	1.5	A
Warm-up time	3	mn
Interelectrode capacitances :		
- Sole to other electrodes	30	pF
- Anode to other electrodes	10	pF
- Line to other electrodes	30	pF
- Frequency range	15.4 to 17.6	GHz

Mechanical

Operating position		any
RF output connector		UG 419/U
Weight		3.6 kg
Dimensions		see drawing
Ambient temperature		–40 to +110 °C
Acceleration		15 g
Vibration	5 to 15 Hz	2 mm
	15 to 500 Hz	2 g

THOMSON-CSF
GROUPEMENT TUBES ELECTRONIQUES

COOLING

Water				Coolanol 35			
Water flow	min.	2	l/mn	Liquid flow	min.	4	l/mn
Pressure drop	max.	0.08	bar	Pressure drop	max.	0.4	bar
Coolant temperature	max.	80	°C	Coolant temperature	max.	80	°C
Absolute inlet pressure	max.	4	bar	Absolute inlet pressure	max.	4	bar

TYPICAL OPERATION (1)

Heater voltage	6.3	V	Oscillating frequency	15.4 to 17.6	GHz
Heater current	1.5	A			
Sole voltage	−1.3	kV	Anode voltage	1.61 to 1.60	kV
Grid voltage	−0.7	kV	Line voltage	2.10 to 3.35	kV
Grid current	0	mA	Sole current	−1.0 to −0.4	mA
Line current	300	mA	Output power	110 to 160	W

ABSOLUTE RATINGS (1)

	min.	max.			min.	max.	
Warm-up time	3	-	mn	Sole current	−20	+5	mA
Heater voltage	6.2	6.4	V	Grid current	−3	+3	mA
Heater current	1.2	2.0	A	Line current	-	300	mA
Sole voltage	−1.28	−2.0	kV	Anode current	−3	+3	mA
Grid voltage	−0.3	−0.8	kV	Output power	100	-	W
Anode voltage	1.0	2.1	kV	Load VSWR (2)		1.2 : 1	
Line voltage	2.2	4.17	kV	Spurious oscillations	-	−20	dB

(1) All voltages are referred to the cathode.

(2) The tube may require a load isolator at load VSWR values above 1.5 : 1 to maintain the tube performances. The tube may be damaged when the mismatch corresponds to a VSWR exceeding 3 : 1.

OPERATING INSTRUCTIONS

Application of voltages

Before applying any voltages to the tube, check the coolant flow.
Apply the heater voltage and allow at least 3 minutes for the cathode to warm-up.
Apply grid and sole voltages.
Apply line voltage. The minimum value of the line voltage given on the tube label is for operating at the lower frequency ; when starting the tube, the voltage applied should be slightly higher.
Apply reduced anode voltage. Increase the voltage slowly and simultaneously check the line voltage, which should not decrease.
Adjust the voltages for each particular operation.
Apply modulation voltages.

Removal of voltages

First remove the modulation voltages.
Remove simultaneously the anode and line voltages.
Remove sole, grid and heater voltages.
Turn off coolant supply to the tube.

Caution

A minimum distance of 15 cm should be kept between the tube and all other magnetic materials.

SUPPLY DIAGRAM

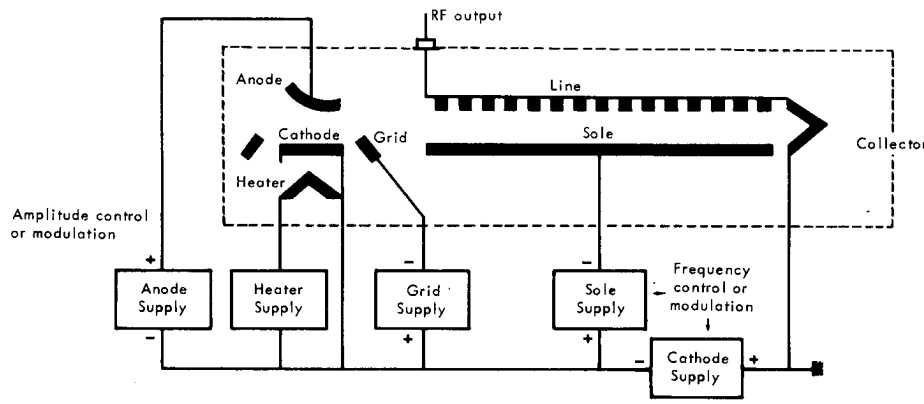

WATER CONNECTION

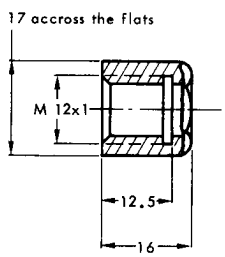

PIN ARRANGEMENT

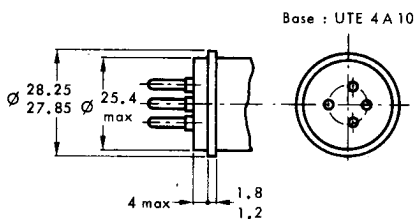

The pin position with respect to the tube axes is determined within 10°

Maximum base eccentricity with respect to the sole connection : 0.3 mm.

MOUNTING FLANGE

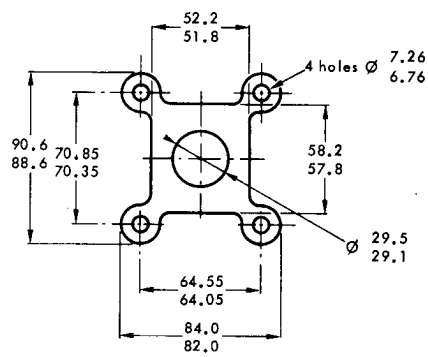

Dimensions in mm.

THOMSON-CSF
GROUPEMENT TUBES ELECTRONIQUES

OUTLINE DRAWING

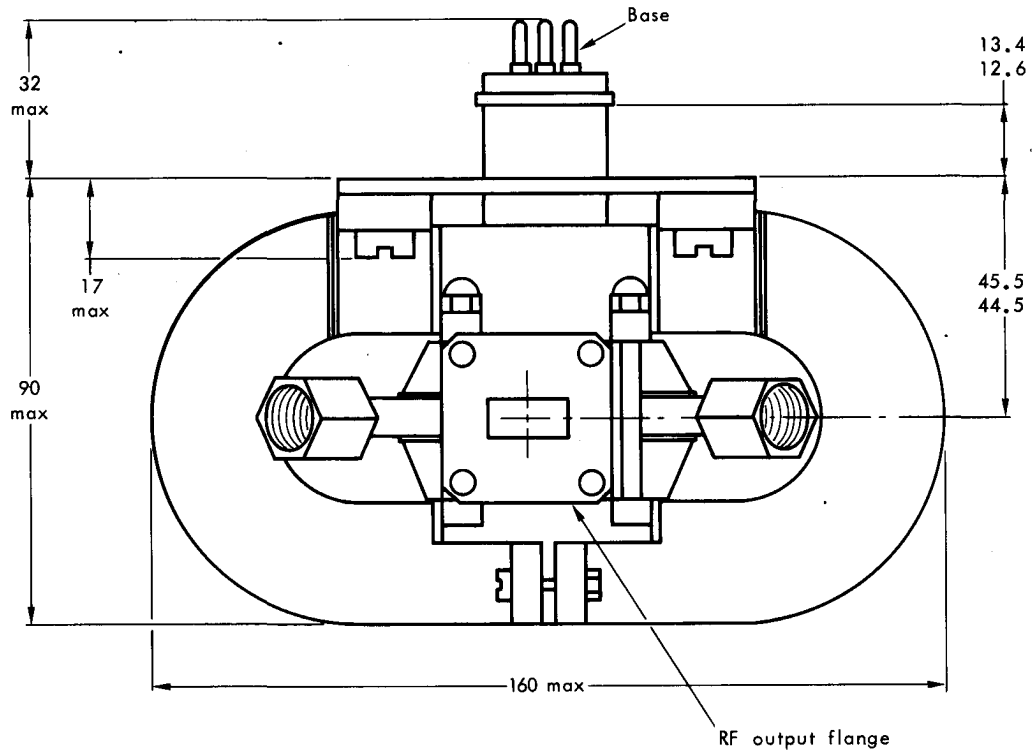

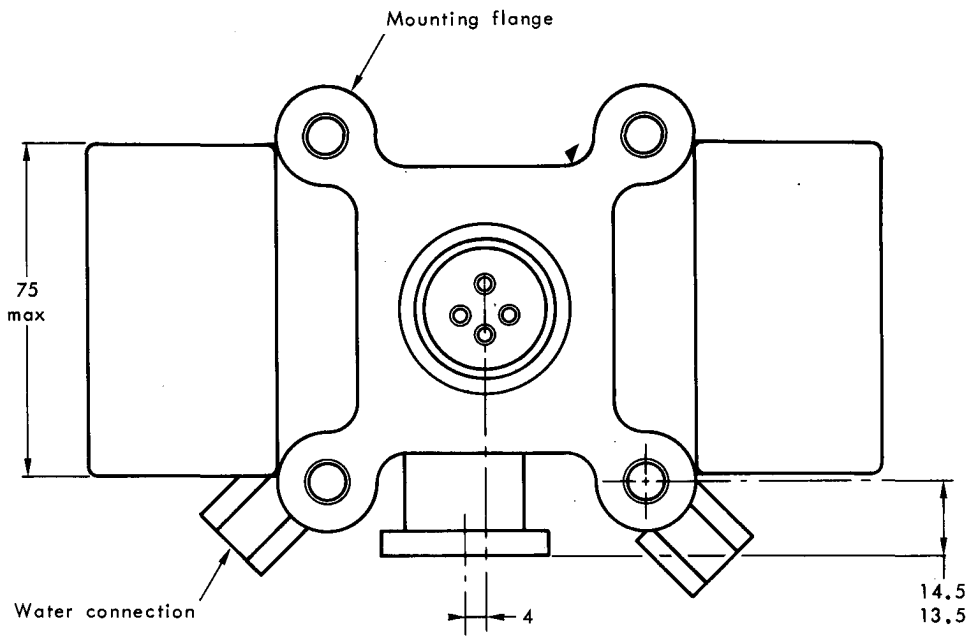

Dimensions in mm.