CMA.1241 CARCINOTRON

The CMA.1241 is a rugged, compact, electronically tunable, crossfield, backward wave oscillator. Its light weight makes it suitable for airborne equipments. Sturdy metal-ceramic construction insures reliable performance in spite of severe environmental conditions.

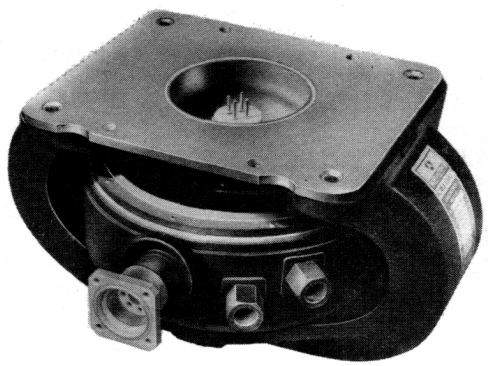

This M type carcinotron provides an output of at least 750 W over the frequency range of 0. 80 to 1. 06 GHz. The tube tunes over the entire frequency range by changing the line or sole voltage.

It can be amplitude modulated through its anode. Frequency modulation can be obtained by line or sole voltage variations.

The CMA.1241 uses integral permanent magnet focusing. Liquid cooling insures operation in a wide temperature range.

GENERAL CHARACTERISTICS

Electrical (1)

	min.		max.	
Heater voltage		6. 3		V
Heater current	2. 5		6. 0	A
Output power	750		–	W
Frequency range	0. 80		1. 06	GHz
Interelectrodes capacitances :				
Sole to all other electrodes	–		125	pF
Anode to all other electrodes	–		20	pF
Line to all other electrodes	–		125	pF
Sole voltage	–0. 7		–1. 6	kV
Sole current	–150		+10	mA
Grid voltage	–0. 1		–0. 8	kV
Grid current	–3		+3	mA
Anode voltage	–		2. 0	kV
Anode current	–3		+3	mA
Line voltage	2. 5		6. 0	kV
Line current		600		mA

Mechanical

Operating position	any
Dimensions	see drawing
Weight	14 kg
RF output connector	coaxial UG 46/U

(1) - All voltages are referred to the cathode.

THOMSON-CSF
GROUPEMENT TUBES ELECTRONIQUES

COOLING

WATER

Water flow	min.	4	l/mn
Pressure drop (1)	max.	0.2	bar
Coolant temperature	max.	80	°C
Absolute inlet pressure	max.	4	bar

COOLANOL 35

Liquid flow	min.	6	l/mn
Pressure drop (1)	max.	0.25	bar
Coolant temperature	max.	80	°C
Absolute inlet pressure	max.	4	bar

ABSOLUTE RATINGS

(non simultaneous values)

	min.	max.	
Warm-up time	3	–	mn
Heater voltage	6.0	6.6	V
Heater surge current	–	12	A
Load VSWR (2)	–	3 : 1	
Ambient temperature	–40	+110	°C
Vibration : 5 to 15 Hz	± 1 mm		
15 to 500 Hz	2 g		

	min.	max.	
Sole voltage (3)	–200	+200	V
Grid voltage (3)	–100	+100	V
Anode voltage (3)	–	200	V
Line voltage	–	6.2	kV
Line current	–	650	mA
Acceleration		15	g

TYPICAL OPERATION

Heater voltage	6.3	V
Heater current	5.3	A
Sole voltage	–1.0	kV
Grid voltage	–0.4	kV
Grid current	0	mA
Line current	600	mA

Oscillating frequency :	0.80	1.06	GHz
Anode voltage	1.60	1.65	kV
Line voltage	3.1	5.8	kV
Sole current	–40	–110	mA
Output power	850	1000	W

OPERATING INSTRUCTIONS

Application of voltages

Before applying any voltages to the tube, check the coolant flow.
Apply the heater voltage and allow at least three minutes for the cathode to warm-up.
Apply grid and sole voltages.
Apply line voltage. The minimum value of the line voltage given on the tube label is for operating at the lower frequency ; when starting the tube, the voltage applied should be slightly higher.
Apply reduced anode voltage. Increase the voltage slowly and simultaneously check the line voltage, which should not decrease.
Adjust the voltages for each particular operation.
Apply modulation voltages.

Removal of voltages

First remove the modulation voltages.
Remove anode voltage.
Remove line voltage.
Remove sole, grid and heater voltages.
Turn off coolant supply to the tube.

Caution

Minimum distance of 15 cm should be kept between the tube and all other magnetic materials.

(1) - 1 bar = approximately 15 psi.
(2) - The tube may require a load isolator at load VSWR exceeding 1.5 : 1 to maintain the tube performances.
(3) - These minimum and maximum ratings are the allowable deviation from the nominal value given for each tube.

Characteristic curves

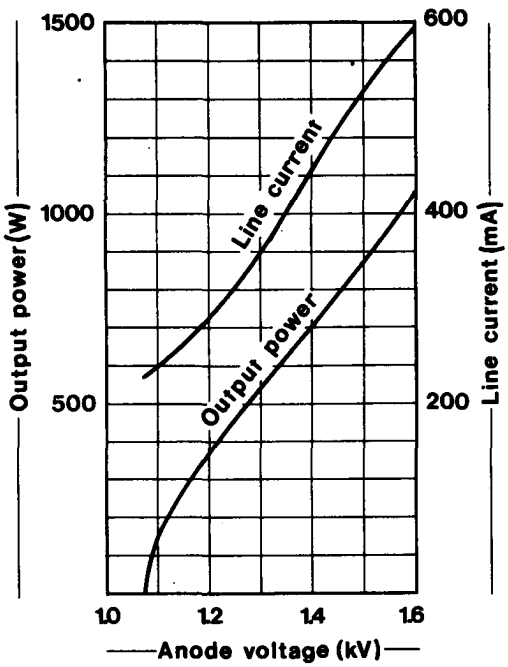

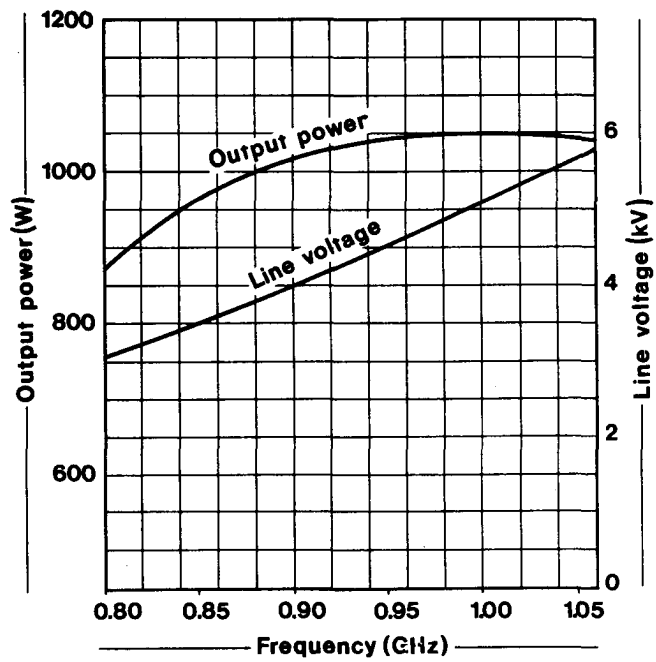

Supply diagram

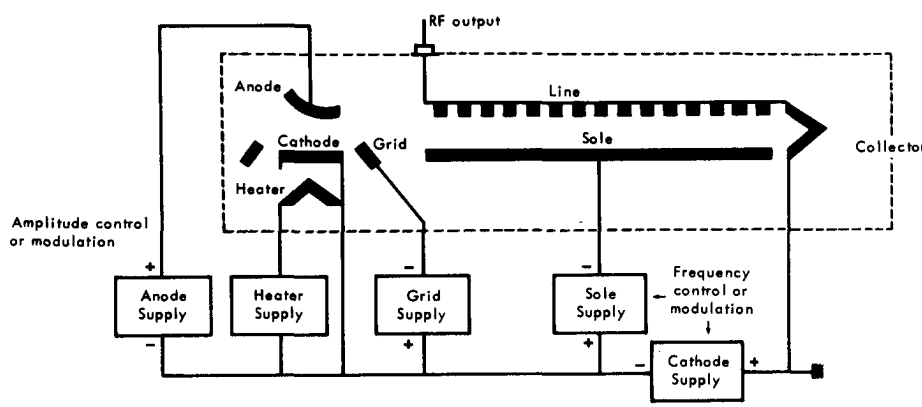

THOMSON-CSF
GROUPEMENT TUBES ELECTRONIQUES

OUTLINE DRAWING

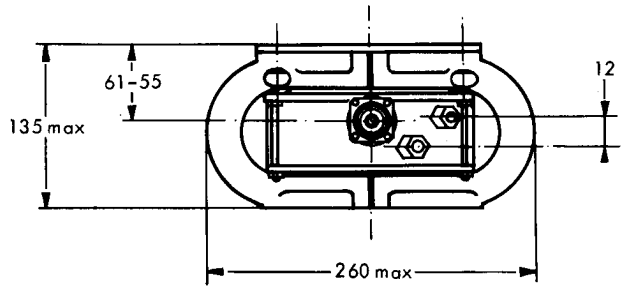

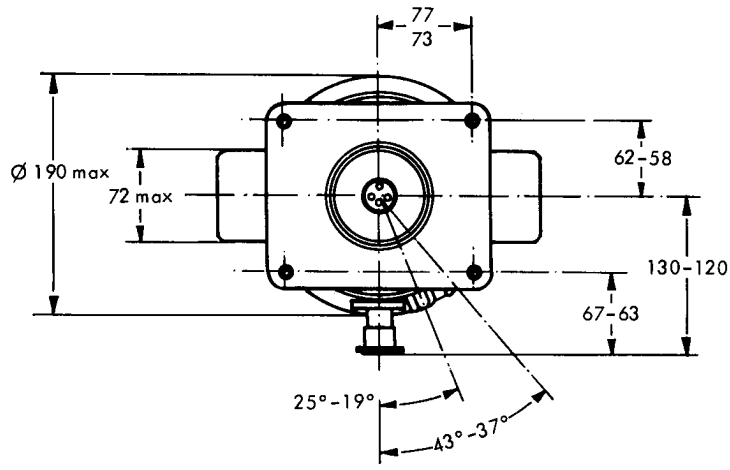

Pin arrangement

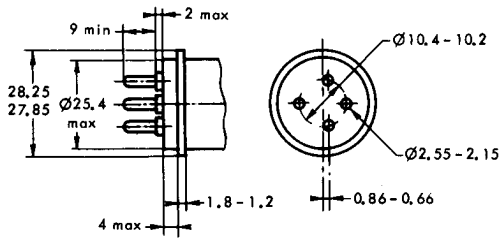

The pin position with respect to the tube axes is determined within 10°

Maximum base eccentricity with respect to the sole connection : 0.3 mm.

Pressurization flange

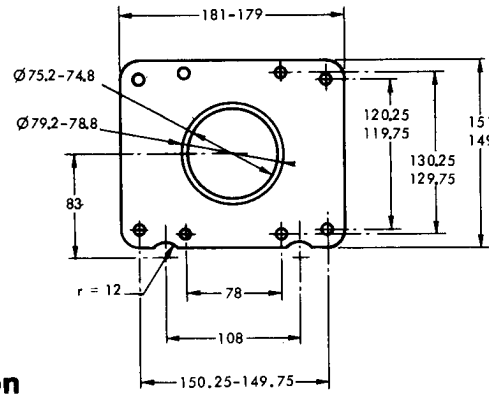

Water connection

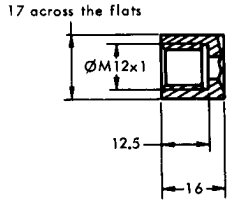

Dimensions in mm.