RAYTHEON

TECHNICAL INFORMATION SERVICE

Technical Information

CK1368 CK1369

PRINTER–TYPE CATHODE RAY TUBES

The CK1368 and CK1369 are 10" Printer–Type Cathode Ray tubes that can deposit an electrostatic charge on paper. The major application is in high speed printing equipment.

They employ a high–resolution, high–current gun. The small wire size, together with the thinness of the element, contribute to the excellent printing quality. Equipment designs using these types are capable of printing many thousands of characters per second.

GENERAL DATA

PRINTING ELEMENT CHARACTERISTICS:

CK1368 (single row)
- Effective length–8 5/8"
- Number of wires per inch–250
- Thickness of element–.040"

CK1369 (multi-row)
- Effective length–8 5/8"
- Number of wires per inch–250
- Thickness of element–.040"
- Number of rows–40
- Spacing of wire centers between rows–.004"

Phosphor (see application note 1) P1

Fluorescence	Green
Persistence	Medium
Focusing Method	Magnetic
Deflecting Method	Magnetic
Deflection Angle	40°

ELECTRICAL DATA

DIRECT INTERELECTRODE CAPACITANCES: (approx.)

Grid #1 to all other electrodes	8 μμf
Cathode to all other electrodes	5 μμf

DESIGN MAXIMUM RATINGS:

Peak Heater-Cathode Voltage: Max. ♦	
Heater Negative with Respect to Cathode	180 volts DC
Heater Positive with Respect to Cathode	180 volts DC
Anode Voltage ▲	25,000 volts DC
Grid #2 Voltage	700 volts DC
Grid #1 Voltage	
Negative – Bias Value	180 volts DC
Positive – Bias Value	0 volts DC
Positive – Peak Value	0 volts DC

CHARACTERISTICS AND TYPICAL OPERATION:

Heater Voltage	6.3 volts ± 10%
Heater Current	0.6 amps.
Collector Voltage ▲	20,000 volts DC
Grid #2 Voltage	450 volts DC
Grid #1 Voltage ⊕	–60 to –115 volts DC

MECHANICAL DATA

BASE ..... Small Shell Duodecal 7 Pin

CAP ..... Small Cavity (J1–21)

MOUNTING POSITION ..... Any

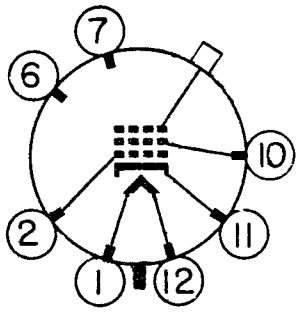

BOTTOM VIEW

TERMINAL CONNECTIONS:

Pin 1	Heater
Pin 2	Grid #1
Pin 6	NC
Pin 7	NC
Pin 10	Grid #2
Pin 11	Cathode
Pin 12	Heater
Cap	Anode (Collector)

ELECTRICAL DATA (Cont'd.)

CHARACTERISTICS AND TYPICAL OPERATION: (Cont'd)

Focusing Coil Current ■	717 ampere turns
Spot Position (undeflected) □	1/2 inch radius

MAXIMUM CIRCUIT VALUES:

Grid #1 Circuit Resistance	1.5 meg. max.

▲ *At or near this rating, the effective resistance of the collector supply should be adequate to limit the anode input power to 6 watts.*

♦ *Cathode should be returned to one side or to the mid-tap of the heater transformer winding.*

⊕ *Visual extinction of focused undeflected spot.*

□ *The center of the undeflected focused spot will fall within a circle of 1/2 inch radius concentric with the center of the tube face, with tube shield.*

■ *For Standard Focus Coil #106 or equivalent, positioned with air gap toward faceplate and center line of air gap 14" from reference line and collector current of 200 microamperes, the current will be approximately 160 Ma.*

PRINCIPLES OF OPERATION:

The printing element is made of fine wires imbedded in glass that permit electrons from the cathode ray beam to pass through the wires to the outside surface. Deflection and amplitude modulation of the electron beam striking the printing wires causes electron charges to be established on paper which acts as a dielectric. As the paper moves across the printing-element face plate, the electron charges actually form the characters that are desired. The characters can be made visible by developing the paper in a positively charged ink and fixing. Since the electron charge on the paper is proportional to the cathode ray beam current, it should be possible to obtain half tones.

APPLICATION NOTES:

1. Proper focus and sweep-scan alignment are accomplished by observing the electron beam as it strikes the phosphor. Side-viewing windows are provided for this purpose. The phosphor is on an area adjacent to the printing element. After initial adjustments are made, the scanning beam is moved to the printing element and final adjustments are made by actual printing process tests.
2. The beam spot size at optimum focus is approximately .003" for beam currents up to 200 μA. Nominal resolution is approximately 100 TV lines per inch.

These data identify a particular developmental tube design and the type designation or the descriptive da a may be subject to change or abandonment.

PRINTER-TYPE CATHODE RAY TUBES

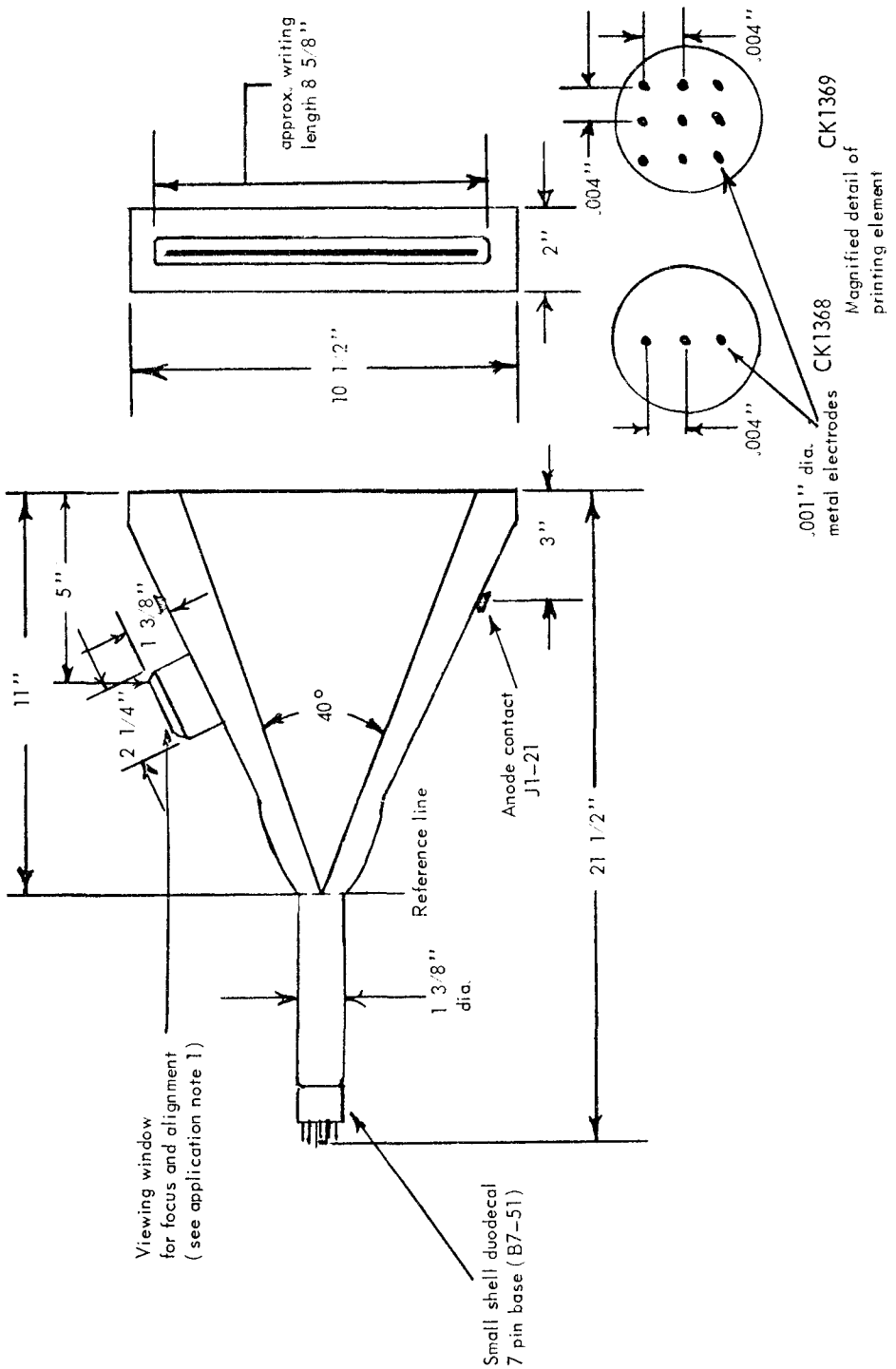

* All dimensions are approximate and there may be variations in samples supplied.