VACUUM GAUGE HEAD, PENNING TYPE EXTRA SENSITIVE

Glass envelope, high vacuum gauge head of the Penning type (cold-cathode, ionization type). Pressure range 10^{-4} torr to 5×10^{-8} torr.

CHARACTERISTICS

Pressure range	10^{-4} to 5×10^{-8} torr
Sensitivity	see page 3

Notes:

1. The graph on page 3 is correct within a factor two for air, hydrogen, argon and carbon dioxide. The inaccuracy can be reduced to plus or minus 5 % by calibrating for the gas composition in question.
2. Water vapour contamination of the gauge head may cause misreadings; in this case it is advisable to take readings some minutes after application of the anode supply voltage.

TYPICAL OPERATING CONDITIONS

CIG-82 combined with magnet type 95380

Anode voltage	V_{ba}	2000	V d.c.
Anode resistor	R_a	1	MΩ

LIMITING VALUES

CIG-82 combined with magnet type 95380

Anode supply voltage	max.	2500	V
Anode current	max.	2	mA

MECHANICAL DATA

Dimensions in mm

Material of tubulation: G28 hard glass

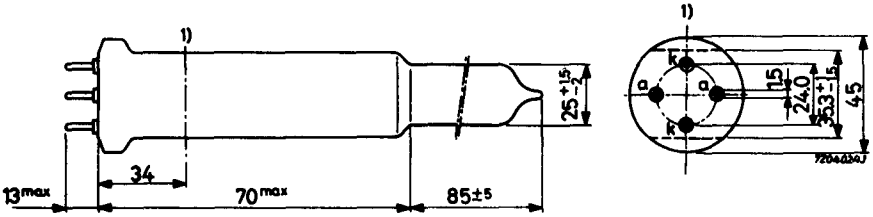

Mounting position: any

Note: When in operation the gauge has a pumping effect; to prevent misreadings due to pressure losses in the connecting tubulation, the connection to the vacuum chamber should be wide and short. Recommended dimensions are diameter min. 10 mm and length max. 100 mm.

ASSOCIATED COMPONENTS

Magnet 95380

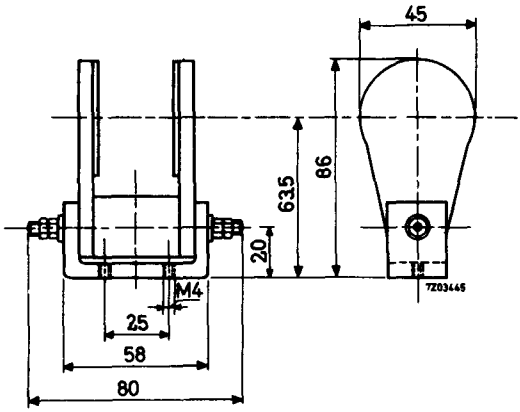

Magnet type 95380

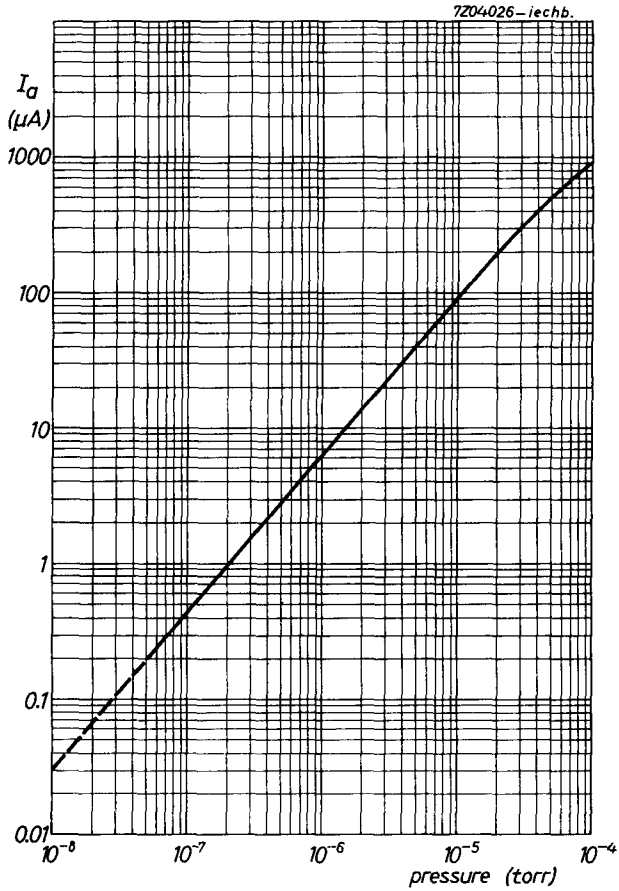
7Z04026-iechb.
I_a
(μA)
1000
100
10
1
0.1
0.01
10^{-8}
10^{-7}
10^{-6}
10^{-5}
10^{-4}
pressure (torr)

PHILIPS

Data handbook

Electronic components and materials

CIG82

page	sheet	date
1	1	1969.01
2	2	1969.01
3	3	1969.01
4	FP	2001.05.17