Ferranti

FLASH TUBE

A Xenon filled flash tube with integral reflector and pulse transformer designed for use in Electronic Flash Equipment for Photographic or similar applications operating at low voltage.

PHYSICAL DETAILS

Base	International Octal
Seated Height	86 mm. ($3\frac{3}{8}$ in.)
Overall Length	102 mm. (4 in.)
Diameter of Reflector	105 mm. ($4\frac{1}{8}$ in.)
Diameter of Base	35 mm. ($1\frac{3}{8}$ in.)
*Mounting Position	Any

See outline drawing overleaf.

PIN CONNECTIONS

Pin 1—Not connected.	Pin 5—Trigger Input.
Pin 2—**	Pin 6—Not Connected.
Pin 3—Not Connected.	Pin 7—**
Pin 4—Trigger Earth.	Pin 8—Not Connected.

**The device is non-polarised, the charging voltage and discharge capacitor may therefore be connected across the pins 2 and 7 without regard to polarity.

RATINGS

Max. Discharge Energy	50 Joules
Max. Operating Voltage ...	500 Volts
Min. Operating Voltage ...	180 Volts
†Min. Interval between Flashes ...	10 Secs
Max. Discharge Capacitor ...	600 μF

TYPICAL OPERATION

Operating Voltage	420 Volts
Trigger Pulse at Pin 5	See Note ‡
Discharge Capacitor	600 μF
Charging Resistor	3·3 kΩ (6 watt)
Flash Duration	·002 Sec (approx)

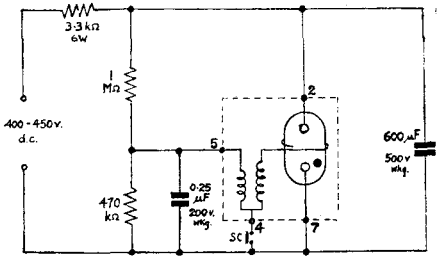

The figures outside the broken line indicate the pins in the CD 14 base. SC denotes the camera shutter contacts or other appropriate switch.

*The recommended method of mounting is by support at the flange of the reflector.

†At maximum dissipation.

‡A suitable trigger voltage may be obtained from the discharge of a Capacitor between pins 5 and 4 as indicated in the circuit diagram.

Max. values are :

Capacitor	0·25 μF
Charge	350 volts.

Tentative
Issue 2.
Feb., 1964

Ferranti

GUIDE NOS. FOR FLASH PHOTOGRAPHY

For operation in a circuit similar to that shown overleaf, i.e. with a discharge energy of 50 joules the following guide numbers may be used.

Monochrome Film

Film Speed A.S.A.	Guide No.
25— 32	50
40— 50	65
64— 80	85
110—125	105
160—200	125
250—320	150

Reversal Colour Film

Film Speed A.S.A.	
25	30
50	40

The above figures are approximate and are intended to be used only as a guide to correct exposure.

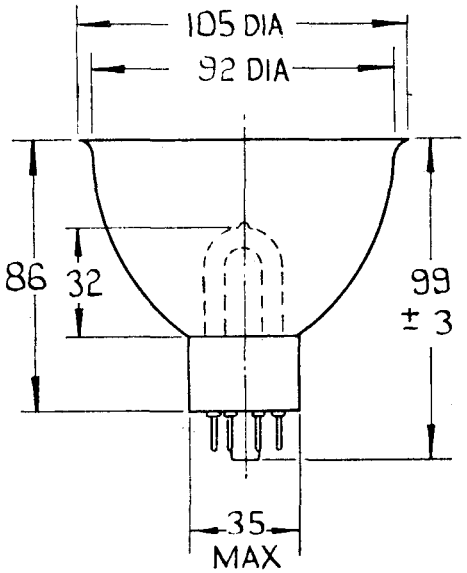

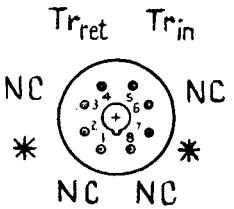

*—The tube is not polarised. The discharge capacitor is connected across these pins without regard to polarity.