Triode *Type CAT30*

(RF POWER AMPLIFIER)

General. A triode with a water-cooled anode and fitted with thoriated tungsten filament, this valve is suitable for use in communications equipment or RF heating applications at frequencies up to 26 Mc/s.

Cooling. The anode forms part of the valve envelope and must be fitted with a specially designed water jacket for cooling by circulating water in direct contact with the anode. The rated flow of water to the anode should not be less than 20 gallons per minute. The temperature of the cooling water must not exceed 150°F (65°C) at the outlet.

The anode and filament seals and filament leads require forced air cooling. The air flow to each of the seals should not be less than 4 cu. ft. per minute at a pressure of 4 in. water gauge and to each filament lead 6 cu. ft. per minute at 5 in. water gauge. The cooling system must be started before the application of any supply voltages and must continue for 15 minutes after their removal.

Filament Switching. The cold filament resistance is 0·009 ohms. The filament current must not exceed 250 A at any time, even instantaneously. An 0·07-ohm resistor should be placed in series with the filament and the normal voltage then applied. The resistor should be cut out after 30 seconds. It may be convenient to place the resistor in the primary of a supply transformer, in which case the above resistance value should be multiplied by the square of the transformation ratio. If the valve is operated for more than 15 minutes without anode current, the filament voltage must be reduced to one-half during the standby period, i.e. by reintroducing the starting resistor.

Storage. It is recommended that a valve in storage should be run under operating conditions for at least 2 hours in each period of 6 months.

Whenever a new valve or a valve which has been idle for more than 2 months is put into service it must be

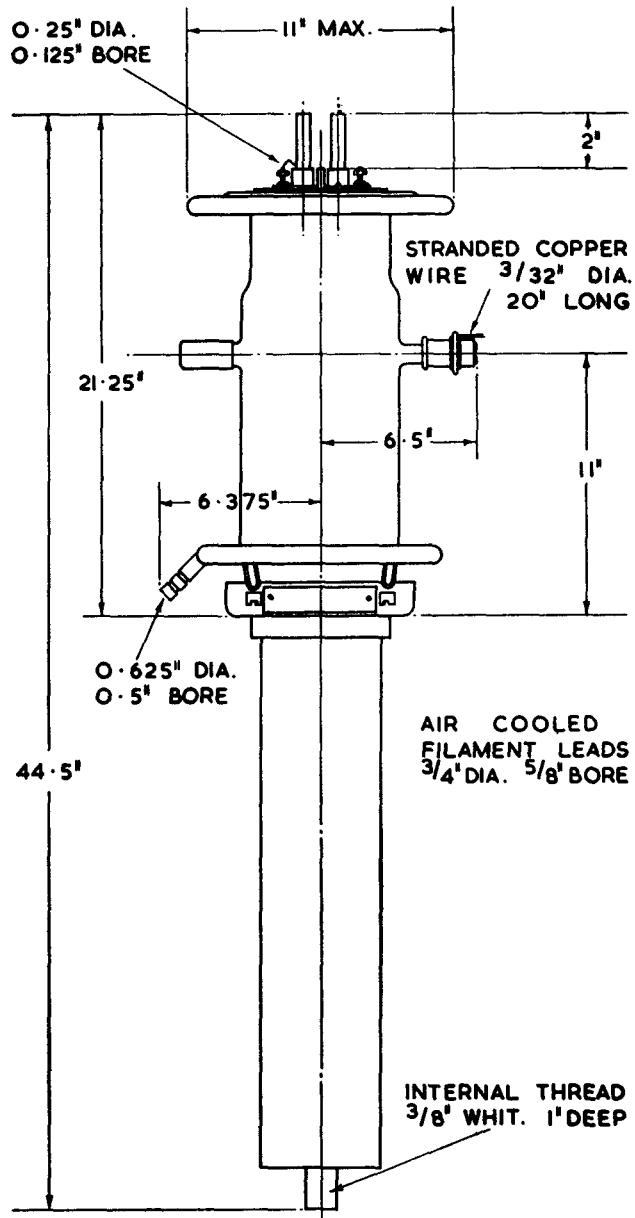

WEIGHT 38 1/2 lb. (17·5 kg.) DIMENSIONS MAXIMUM

MARCONI'S WIRELESS TELEGRAPH COMPANY LIMITED

Head Office: Marconi House, Chelmsford, England. Telephone: Chelmsford 3321. *Telegraphic Address: Expanse, Chelmsford*

conditioned by operating for 1 hour at half the normal anode voltage and current. The anode voltage should then be increased slowly to the normal value. During this process a resistance of at least 25 ohms should be connected into the anode supply lead, in order to limit the surge current in the event of a flash-over inside the valve.

HT Switching. It is not permissible to apply directly HT voltage in excess of 7 kV. When the valve is to be operated at a higher voltage the HT should be gradually increased from a low value.

Mounting. The valve must be wholly supported by its water jacket which should be capable of adjustment so that the axis of the valve is truly vertical. Rigid connections should be made to the anode only.

It is essential that the connections to the grid ring shall be sufficiently flexible to allow for the expansion of the valve without imposing mechanical strain on the glass.

APPROXIMATE DATA

V_f		17·5	V
I_f		176	A
$V_{a(max)}$		20	kV
$p_{a(max)}$		75	kW
$p_{g1(max)}$		4	kW
$I_{k(pk)(max)}$		50	A
$I_{g1(rf)(max)}$		30	A
$f_{(max)}$	(at max. ratings)	5	Mc/s
	(at reduced ratings)	26	Mc/s
μ	taken at Va 9 kW, Ia 1·5 A	35	
r_a		1450	Ω
g_m		2·4	mA/V
c_{a-f}	taken without water jacket	1·8	pF
c_{g1-a}		56	pF
c_{g1-f}		101	pF

(1) RF POWER AMPLIFIER AND OSCILLATOR CLASS C TELEGRAPHY

(*Unmodulated key-down conditions, per valve.*)
Maximum permissible ratings.

V_a	20	kV
V_{g1}	−2	kV
p_a	75	kW
p_{g1}	4	kW

Typical Operation

V_a	20	kV
V_{g1}	−1500	V
$v_{g1(pk)}$	3080	V
I_a	13·75	A
I_{g1} (a)	2·6	A
Z_a	677	Ω
P_{dr} (a)	7·7	kW
p_a	74	kW
P_{out}	195	kW

(2) RF POWER AMPLIFIER CLASS C ANODE MODULATED

(*Carrier conditions, per valve,* 100% *modulation.*)
Maximum permissible ratings.

V_a	16	kW
V_{g1}	−2	kV
p_a	50	kW
p_{g1}	4	kW

Typical Operation

V_a	16	kV
V_{g1}	−1390	V
$v_{g1(pk)}$	2540	V
I_a	8·5	A
I_{g1} (a)	1·4	A
Z_a	855	Ω
P_{dr} (a)	3·4	kW
p_a	40	kW
P_{out}	96	kW

NOTE

At frequencies above 5 Mc/s the permissible anode voltage is reduced to the following % of maximum.

f	5	10	15	20 Mc/s
$V_{a(max)}$	100	90	75	50 %

(*a*) Subject to wide variation.

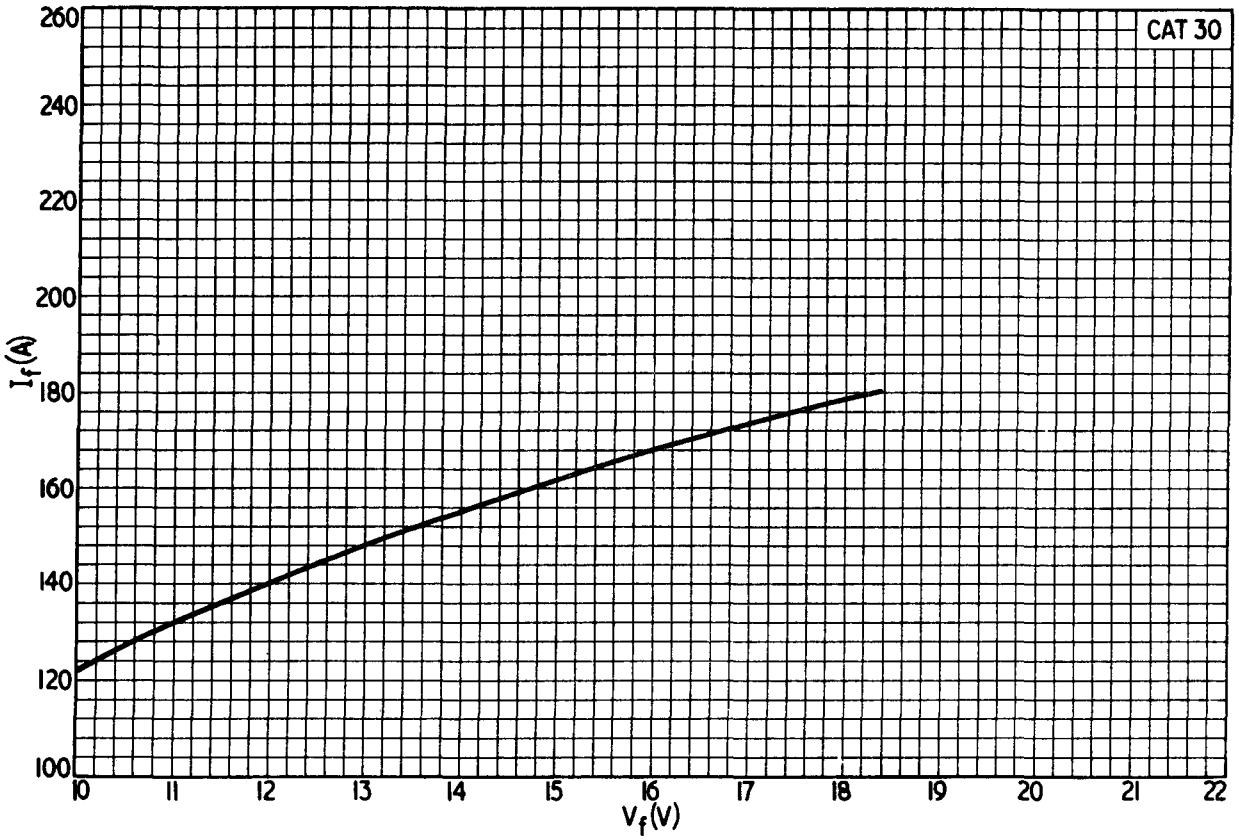
CAT 30
260
240
220
200
180
160
140
120
100
I_f(A)
10
11
12
13
14
15
16
17
18
19
20
21
22
V_f(V)

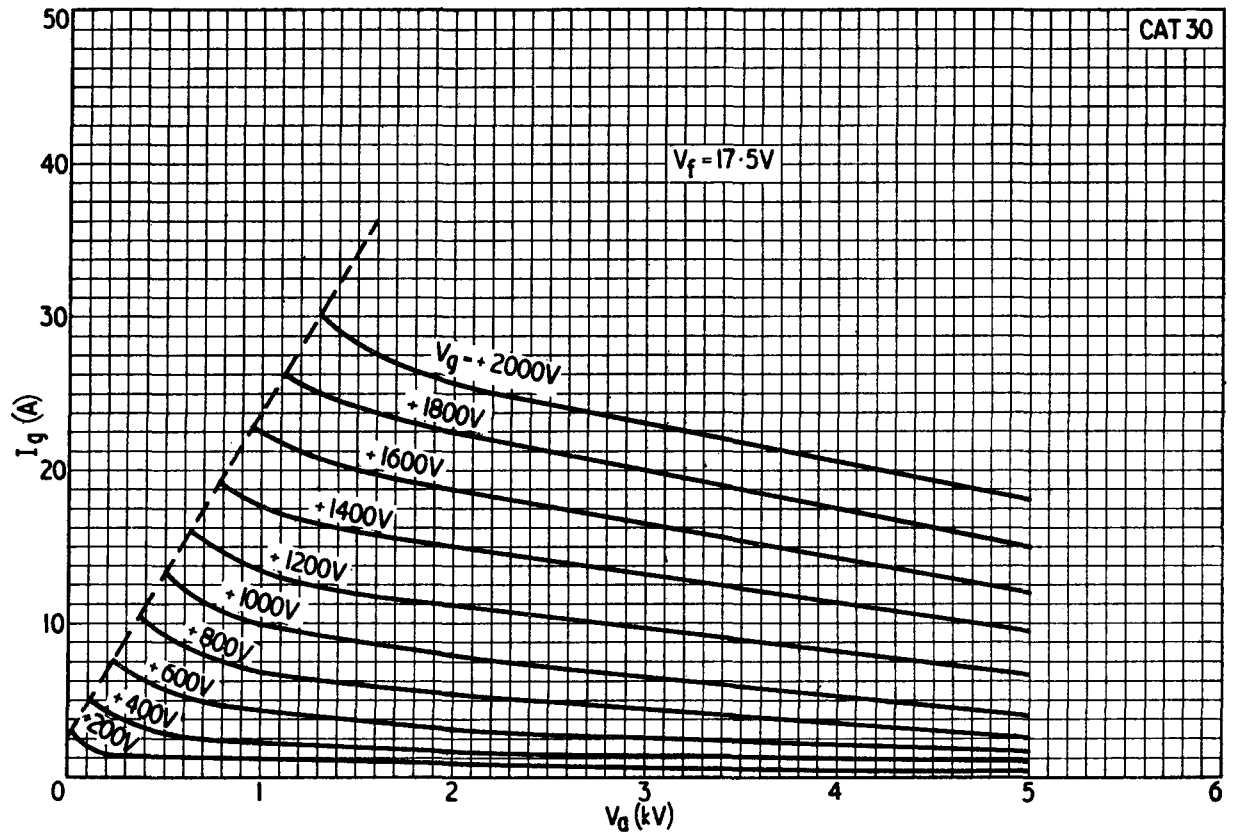
CAT 30
V_f = 17·5V
V_g = +2000V
+1800V
+1600V
+1400V
+1200V
+1000V
+800V
+600V
+400V
+200V
50
40
30
20
10
0
I_g (A)
1
2
3
4
5
6
V_a (kV)

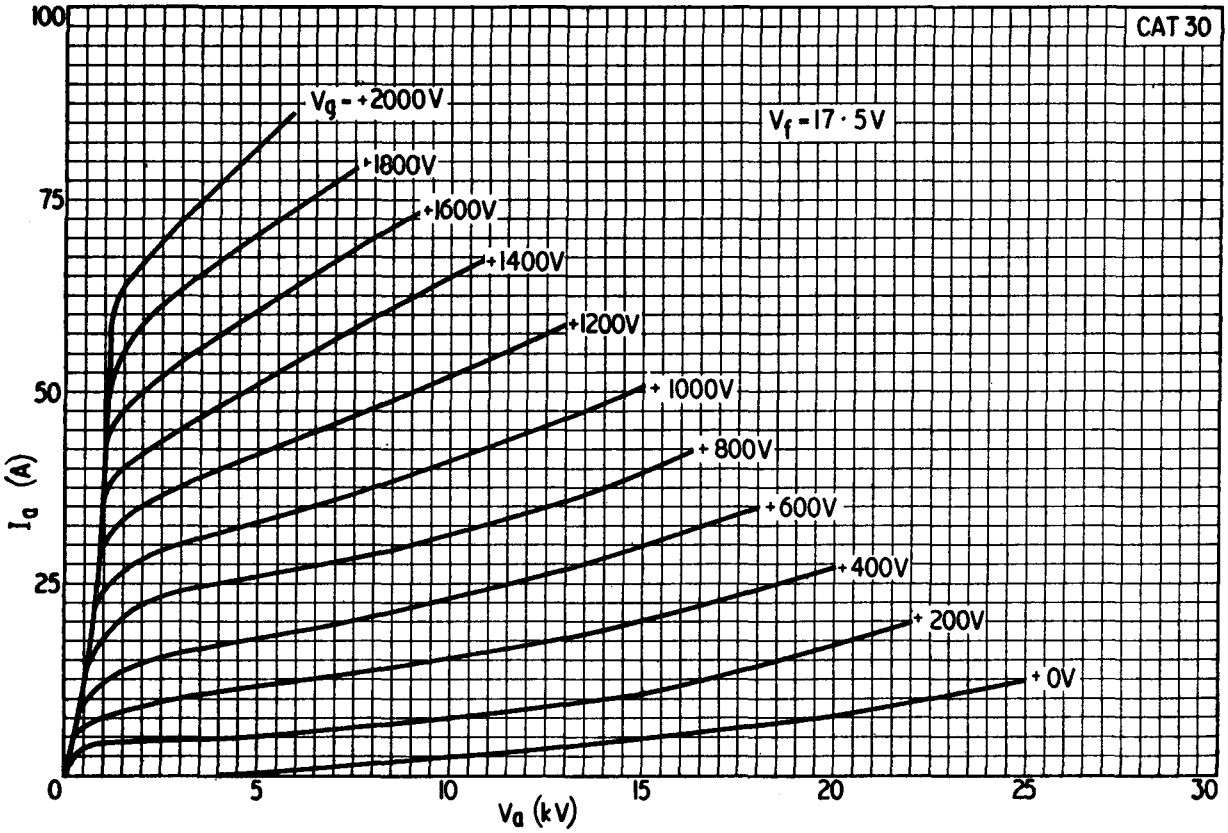

PRINTED IN ENGLAND