Triode *Type CAT 29*

(HF POWER AMPLIFIER AND OSCILLATOR)

General. A water-cooled anode transmitting triode fitted with a thoriated tungsten filament for use in communication or RF heating equipments.

The anode forms part of the envelope and must be fitted with a specially designed water jacket. The anode and filament seals require forced air cooling. This valve is suitable for use at frequencies up to 40 Mc/s.

Cooling. All cooling supplies must be started before the application of any supply voltages.

The water flow to the anode must not be less than 4·5 gallons per minute. The temperature of the cooling water must not be greater than 65°C at the outlet. The air flow to the anode seal and to the filament seals should not be less than 4 cu. ft. per minute. The temperature of the anode and filament seals must not exceed 140°C.

Filament Starting. The cold resistance of the filament is 0·0225 ohms. The filament current must never exceed 90 A even instantaneously. It is recommended that a resistance of 0·14 ohms be placed in series with the filament and the normal filament voltage applied. After 30 seconds the series resistance should be cut out. When the filament supply is obtained from a transformer it may be more convenient to place a resistance in the transformer primary, in which case the value given above should be multiplied by the square of the transformer ratio.

Mounting. The valve must be supported by its water jacket which should be capable of adjustment so that the axis of the valve is vertical. Rigid connections should be made to the anode only.

It is essential that the connections to the grid shall be sufficiently flexible to allow for the expansion of the valve without imposing mechanical strain on the glass work.

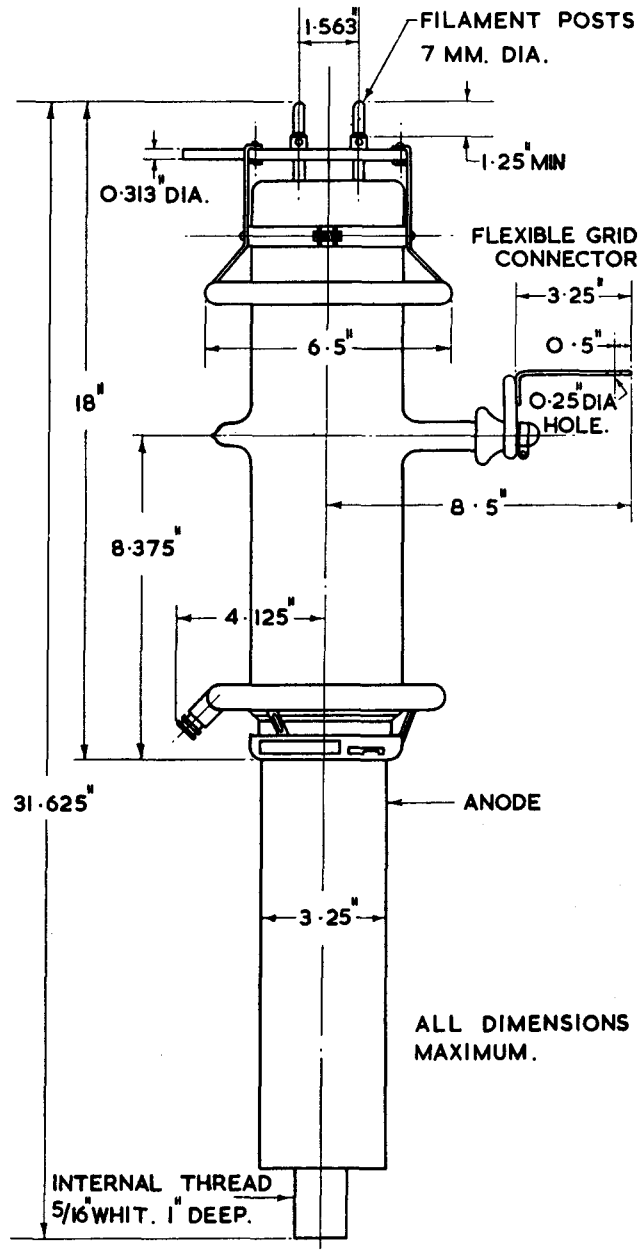

MARCONI'S WIRELESS TELEGRAPH COMPANY LIMITED

Head Office: Marconi House, Chelmsford, England. Telephone: Chelmsford 3221. Telegraphic Address: Expanse, Chelmsford

Seasoning. It is recommended that a valve in storage should be run under operating conditions for at least 2 hours in each period of 6 months.

Whenever a new valve or a valve which has been idle for more than 2 months is put into service it must be conditioned by operating for 1 hour at half the normal anode voltage and current. The anode voltage should then be increased slowly to the normal value. During this process a resistance of at least 25 ohms should be connected into the anode supply lead, in order to limit the surge current in the event of a flash-over inside the valve.

Standby conditions with no anode current. If the valve is operated for periods greater than 15 minutes without anode current flowing the filament voltage should be reduced to one half the normal value during the standby period. This can be achieved by switching in the starting resistance.

HT Switching. It is not permissible to apply directly HT voltage in excess of 7 kV. When the valve is to be operated at a higher voltage the HT should be gradually increased from a low value.

APPROXIMATE DATA

V_f		11·5	V
I_f		(approx.) 57	A
$V_{a(max)}$		15	kV
$p_{a(max)}$		18	kW
$p_{g1(max)}$		800	W
$I_{k(pk)(max)}$		20	A
$I_{g1(rf)(max)}$		30	A
$f_{(max)}$	at full ratings	20	Mc/s
	at reduced ratings	40	Mc/s
μ	taken at Va 12 kV, Ia 1 A	45	
r_a	taken at Va 12 kV, Ia 1 A	4750	Ω
g_m	taken at Va 12 kV, Ia 1 A	9·5	mA/V
c_{g-f}		29	pF
c_{a-f}		1·9	pF
c_{g-a}		21	pF

Operating Conditions

(1) HF POWER AMPLIFIER AND OSCILLATOR CLASS C TELEGRAPHY AND FM TELEPHONY

(*Unmodulated key-down conditions per valve.*)

Maximum permissible ratings.

V_a	15	kV
V_{g1}	−2	kV
p_a	18	kW
p_{g1}	800	W

Typical conditions

V_a	15	10	kV
V_{g1}	−980	−850	V
$v_{g1(pk)}$	2080	1950	V
I_a	3·35	3·2	A
I_{g1} (a)	0·5	0·58	A
Z_a	1970	1350	Ω
P_{dr} (a)	1050	1150	W
p_a	13·7	8·8	kW
P_{out}	36·5	23·2	kW

(2) HF POWER AMPLIFIER CLASS C ANODE MODULATED

(*Carrier conditions per valve.*)

Maximum permissible ratings.

V_a	12	kV
V_{g1}	−2000	V
p_a	12	kW
p_{g1}	800	W
Mod.	100	%

Typical conditions

V_a	12	10	kV
V_{g1}	−850	−750	V
$v_{g1\ pk}$	1640	1540	V
I_a	2·05	2·0	A
I_{g1} (a)	0·3	0·35	A
Z_a	2650	2300	Ω
P_{dr} (a)	500	550	W
p_a	7·6	6	kW
P_{out}	17	14	kW

NOTE

The figures quoted above are only applicable when operating at frequencies up to 20 Mc/s. At higher frequencies the anode voltage must be reduced according to the following table.

f (Mc/s)	20	25	30	40
$\%V_{a(max)}$	100	75	50	35

(*a*) Subject to wide variations.

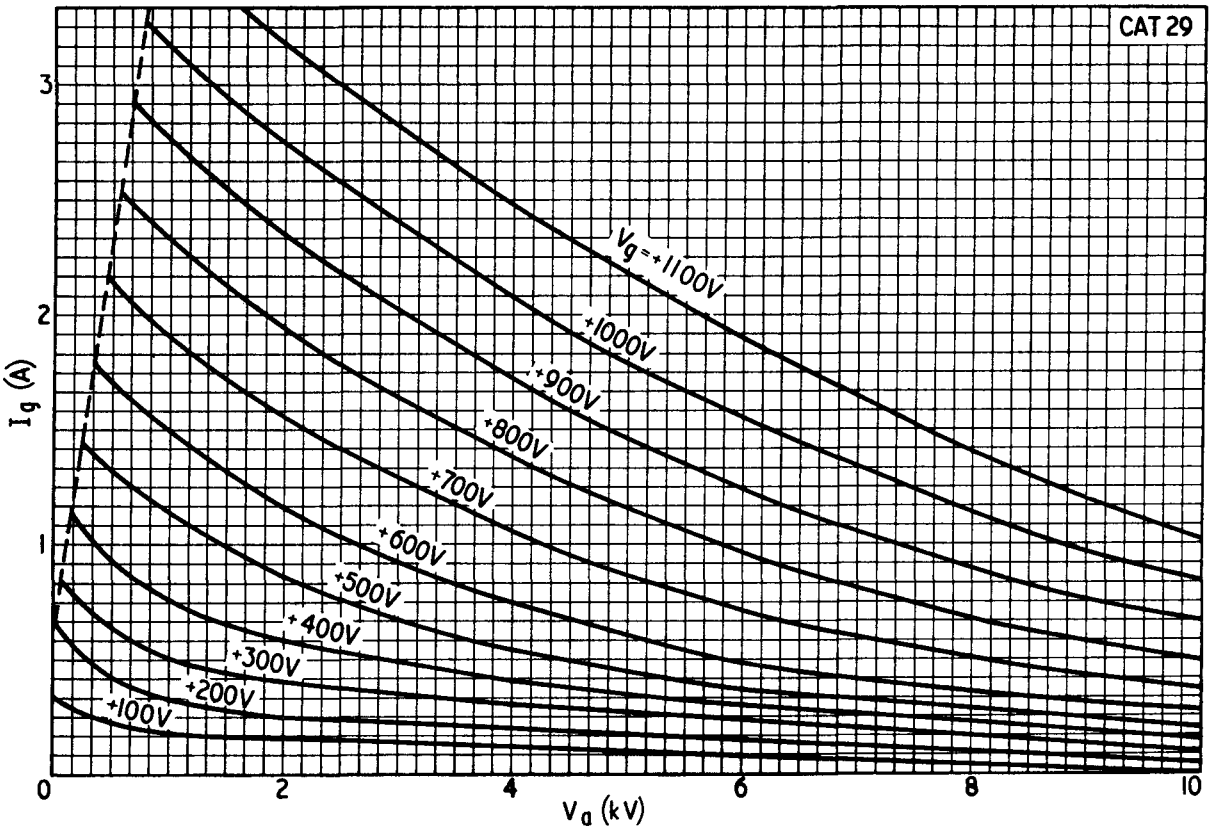
CAT 29
V_g=+1100V
+1000V
+900V
+800V
+700V
+600V
+500V
+400V
+300V
+200V
+100V
I_g (A)
V_a (kV)
0
1
2
3
2
4
6
8
10

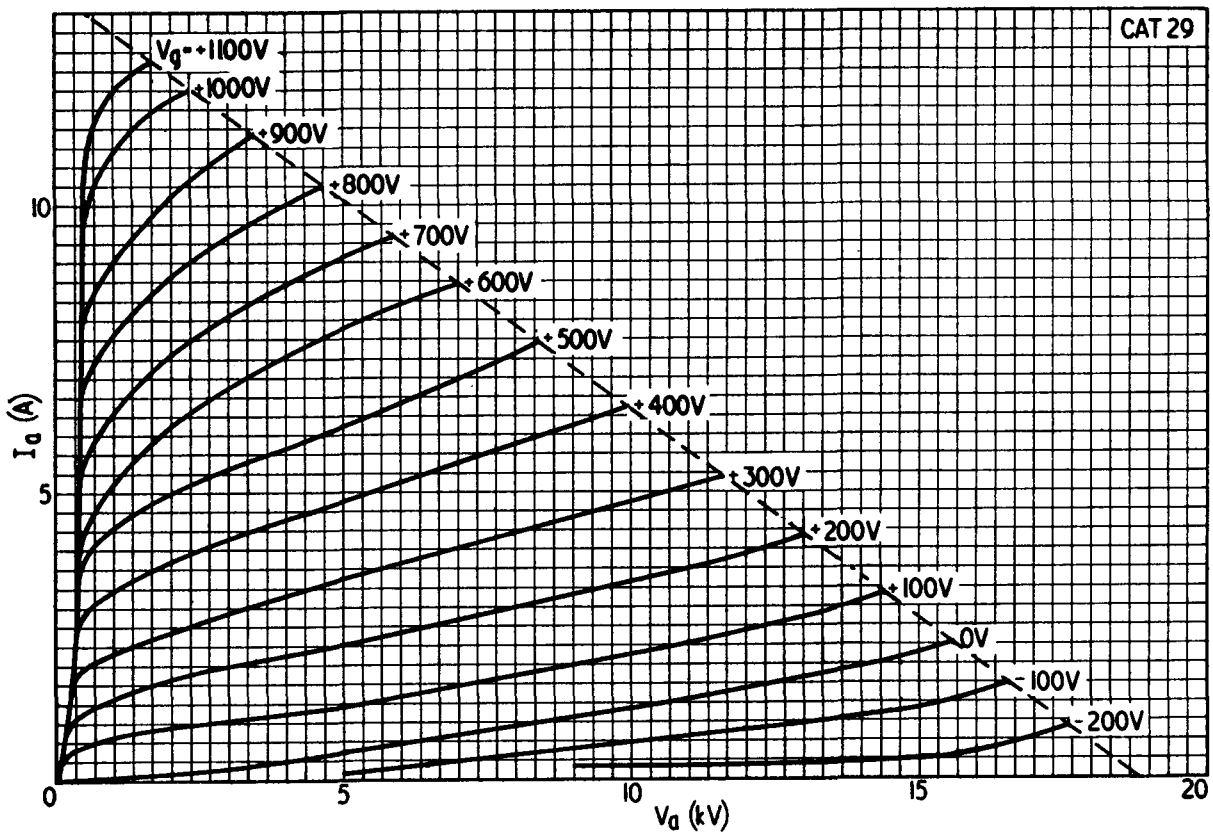
CAT 29
V_g=+1100V
+1000V
+900V
+800V
+700V
+600V
+500V
+400V
+300V
+200V
+100V
0V
-100V
-200V
I_a (A)
V_a (kV)
0
5
10
5
10
15
20

PRINTED IN ENGLAND