Triodes *Types CAT17 and CAT17C*

HF AMPLIFIERS

General. A water-cooled anode transmitting triode fitted with a tungsten filament suitable for use as a high frequency amplifier at frequencies up to 25 Mc/s. The two valves are identical except for filament lead cooling, the CAT17C having air-cooled leads and the CAT17 water-cooled leads.

Cooling. The anode forms part of the valve envelope and is designed for cooling by water circulated in direct contact with the envelope. The rated flow should be about 40 gallons per minute. The temperature of the cooling water at the outlet must not be greater than 150°F (65°C). The temperature rise across the water jacket should not exceed 25°F (15°C).

The external valve filament leads of the CAT17 require to be cooled by circulating water. The rate of flow in this system should not be less than 400 c.c. per minute. At the normal flow the drop in pressure across the system is approximately 24 in. The temperature of the outlet water from this system should not be greater than 122°F (50°C).

Each external filament lead of the CAT17C requires a flow of air of approximately 8 cu. ft. per minute at a pressure equal to 5 in. water gauge.

Air cooling of the anode glass and grid seals is essential. There are two cooling rings at the grid seal, and one cooling ring at the anode-glass seal. A pressure equal to a 4-in. head of water is required at the inlet to each ring, and each ring requires a volume of air of approximately 4 cu. ft. per minute.

All cooling supplies must be started before the application of any supply voltages, and must continue for at least 2 minutes after the removal of all supply voltages.

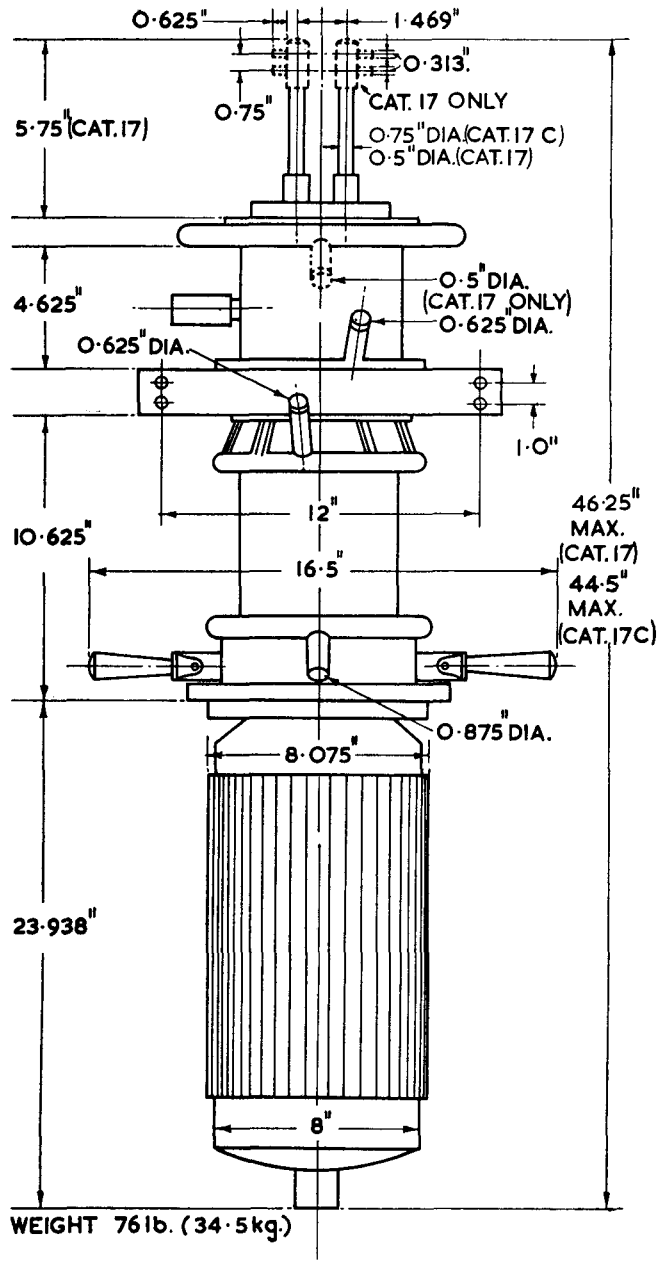

MARCONI'S WIRELESS TELEGRAPH COMPANY LIMITED

Marconi House, Chelmsford. Telephone: Chelmsford 3221. Telex: 1953. Telegrams: Expanse Chelmsford Telex

Filament Starting. The cold resistance of the filament is of the order of 0·0057 Ω. The filament current must never exceed 500 A at any time during the switching-on period. If the valve is operated for periods greater than 15 minutes without anode voltage being applied, the filament voltage must be reduced to one-half its normal value during the standby period.

HT Switching. It is not permissible to apply directly HT voltage in excess of one-third the maximum rated anode voltage. At higher voltages the HT should be either gradually increased from a low value or three-position switching employed.

Mounting. The valve must be completely supported by its water jacket, which should be capable of adjustment so that the axis of the valve is truly vertical. Rigid connections must be made to anode only.

Seasoning. Whenever a new valve is put into service, or when a valve has been idle for periods of approximately 2 months, it must be seasoned by operating for at least one hour at half the normal anode voltage and current. The anode voltage should then be increased slowly to normal value.

APPROXIMATE DATA

V_f		32·5	V
I_f		460	A
$V_{a\,(max)}$		20	kV
$p_{a\,(max)}$		150	kW
$p_{gl\,(max)}$		8·0	kW
$I_{gl\,(pk)(max)}$		100	A
μ	taken at V_a 15 kV, V_{gl} −100 V	45	
r_a	taken at V_a 15 kV, V_{gl} −100 V	900	Ω
g_m	taken at V_a 15 kV, V_{gl} −100 V	50	mA/V
$C_{a\text{-}gl}$		52	pF
$C_{a\text{-}k}$		4·5	pF
$C_{gl\text{-}k}$		100	pF

Each valve is marked with the filament voltage to give 100 A emission at 90% saturation.

Typical Operation

(1) HF POWER AMPLIFIER AND OSCILLATOR. CLASS C TELEGRAPHY

(*Unmodulated, one valve, key down conditions.*)

V_a		15	18	20	kV
I_a		18·8	18·8	18·8	A
V_{gl}		−950	−1,030	−1,070	V
I_{gl}	(a)	4·3	4·3	4·2	A
$v_{gl\,(pk)}$		2,650	2,730	2,770	V
P_{dr}	(a)	11·5	11·6	11·6	kW
Z_a		400	490	550	Ω
p_a		74	80	104	kW
P_{out}		209	258	272	kW

(2) HF POWER AMPLIFIER AND OSCILLATOR. CLASS C

(*Anode modulated, one valve, carrier conditions, permissible modulation 100%.*)

V_a		10	15	kW
I_a		9·6	9·8	A
V_{gl}		−895	−1,120	V
I_{gl}	(a)	1·9	1·8	A
$v_{gl\,(pk)}$		1,845	2,070	V
P_{dr}	(a)	3·5	3·8	kW
Z_a		435	716	Ω
p_a		32	39	kW
P_{out}		64		kW

(3) HF POWER AMPLIFIER. CLASS B TELEPHONY

(*One valve, carrier conditions, permissible modulation 100%.*)

V_{gl}		15	20	kV
I_a		10·6	10·6	A
V_a		−330	−440	V
$v_{gl\,(pk)}$		890	940	V
P_{dr}	(a) (b)	5·4	5·6	kW
Z_a		330	480	Ω
p_a		114	146	kW
P_{out}		46	67	kW

NOTES

(a) Subject to wide variation. The figures are approximate only.

(b) At crest of audio cycle with 100% modulation.

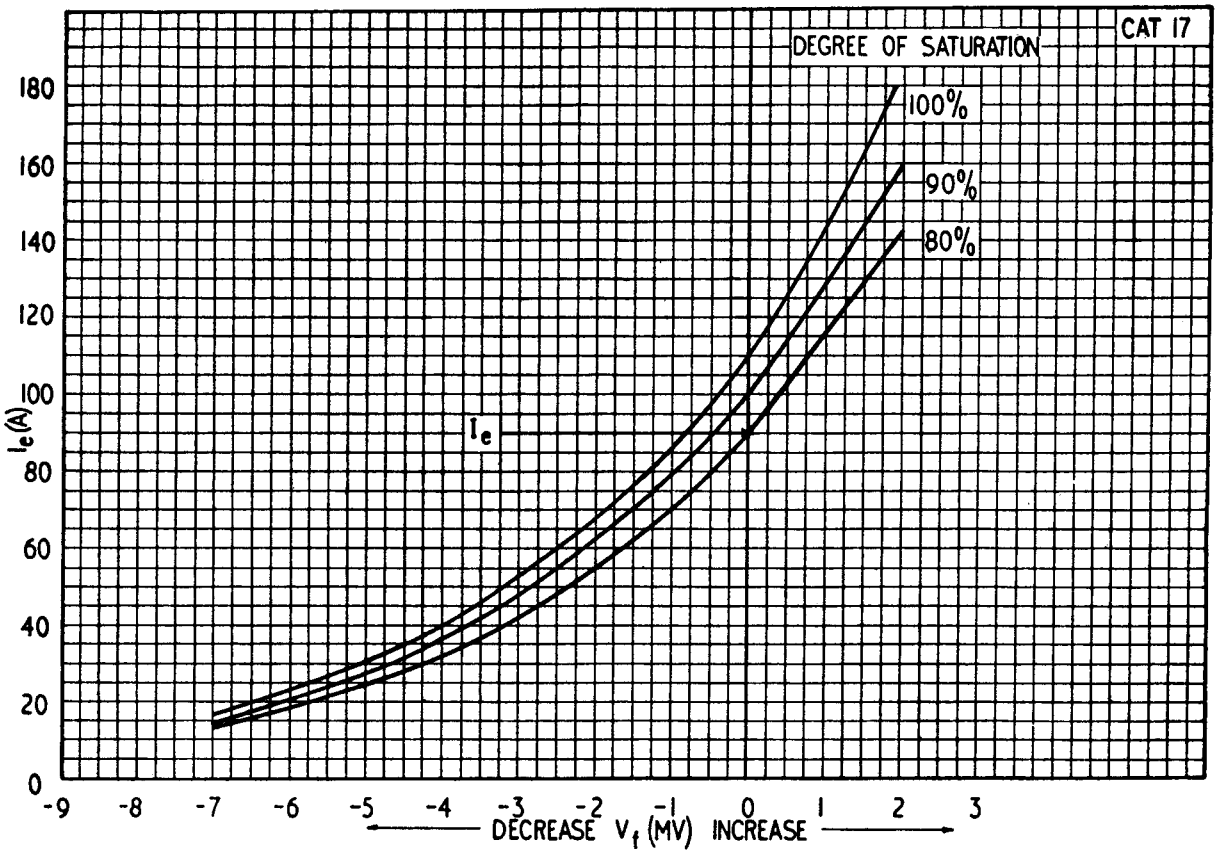
CAT 17
DEGREE OF SATURATION
100%
90%
80%
I_e
I_e (A)
180
160
140
120
100
80
60
40
20
0
-9
-8
-7
-6
-5
-4
-3
-2
-1
0
1
2
3
DECREASE V_f (MV) INCREASE

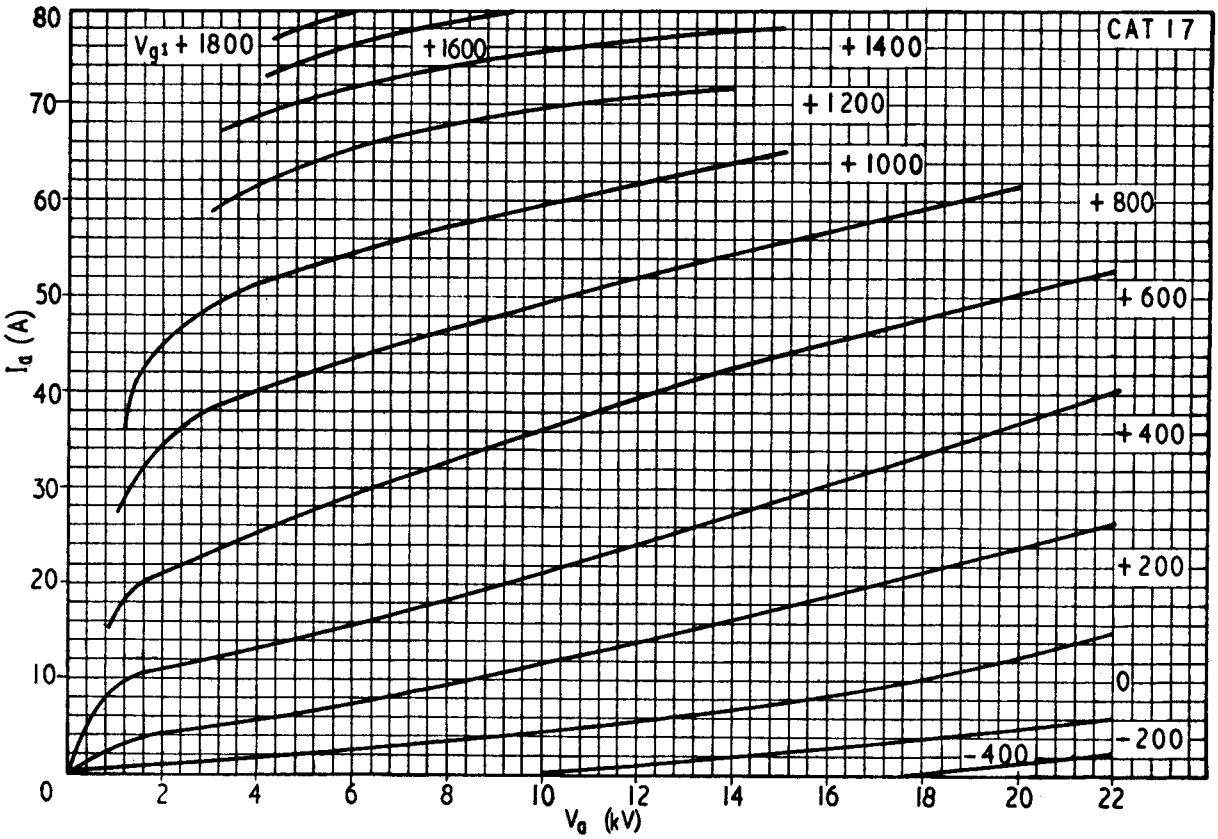
CAT 17
V_{g1} + 1800
+ 1600
+ 1400
+ 1200
+ 1000
+ 800
+ 600
+ 400
+ 200
0
- 200
- 400
I_a (A)
80
70
60
50
40
30
20
10
0
2
4
6
8
10
12
14
16
18
20
22
V_a (kV)

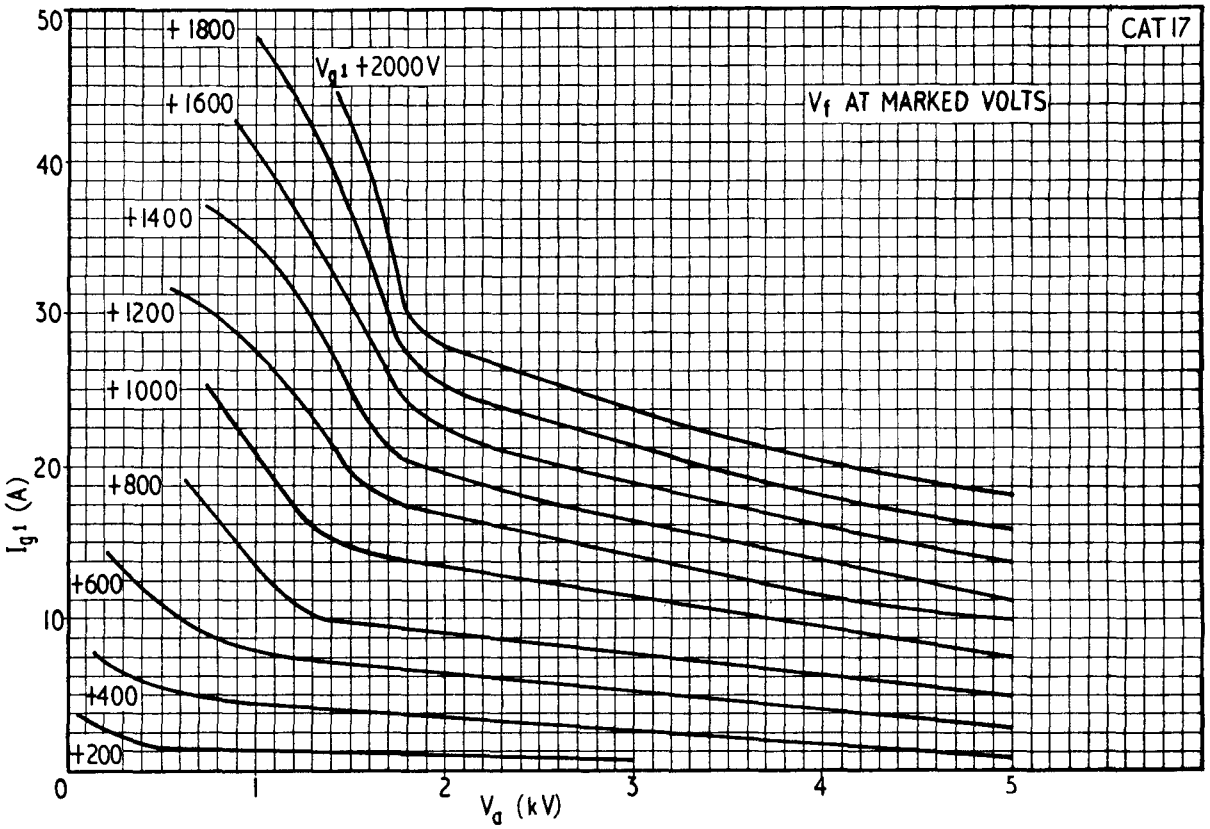
CAT 17
V_f AT MARKED VOLTS
V_{g1} +2000 V
+1800
+1600
+1400
+1200
+1000
+800
+600
+400
+200
I_{g1} (A)
V_a (kV)
0
1
2
3
4
5
10
20
30
40
50

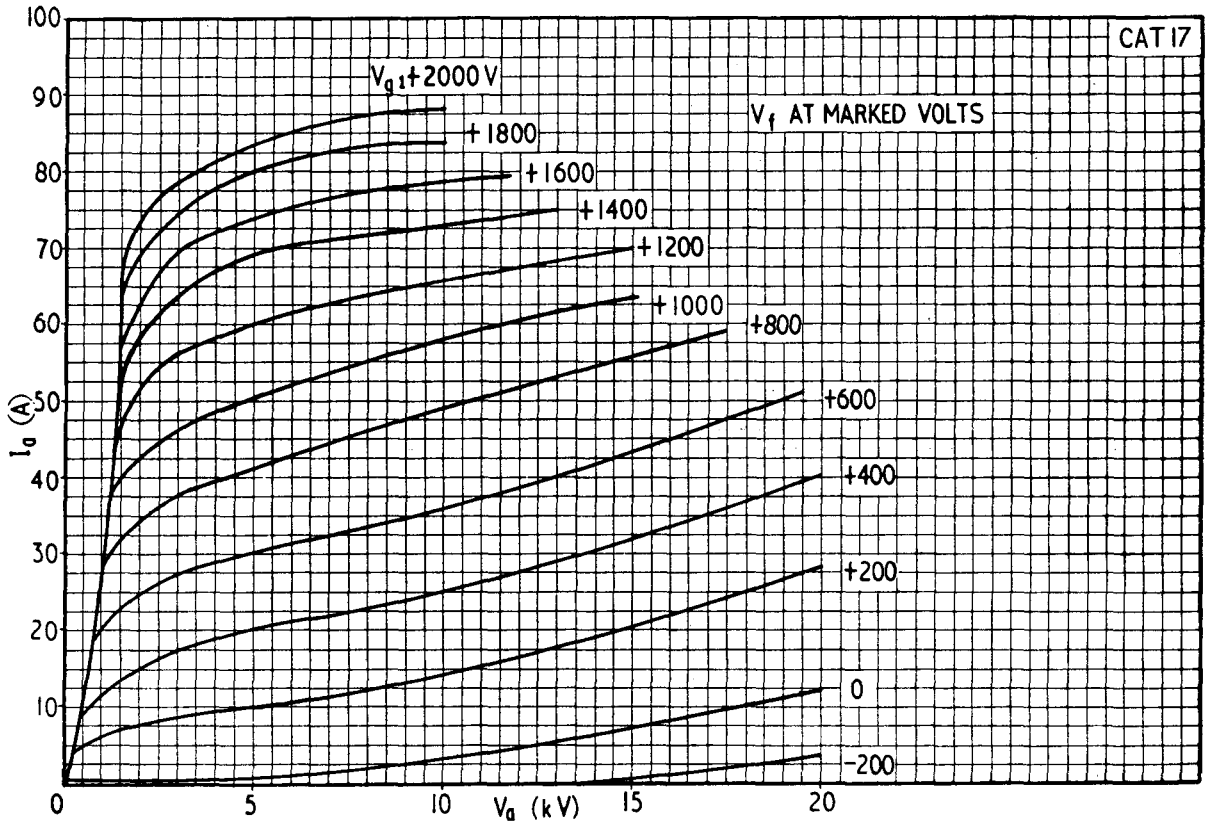
CAT 17
V_f AT MARKED VOLTS
V_{g1}+2000 V
+1800
+1600
+1400
+1200
+1000
+800
+600
+400
+200
0
-200
I_a (A)
V_a (kV)
0
5
10
15
20
10
20
30
40
50
60
70
80
90
100

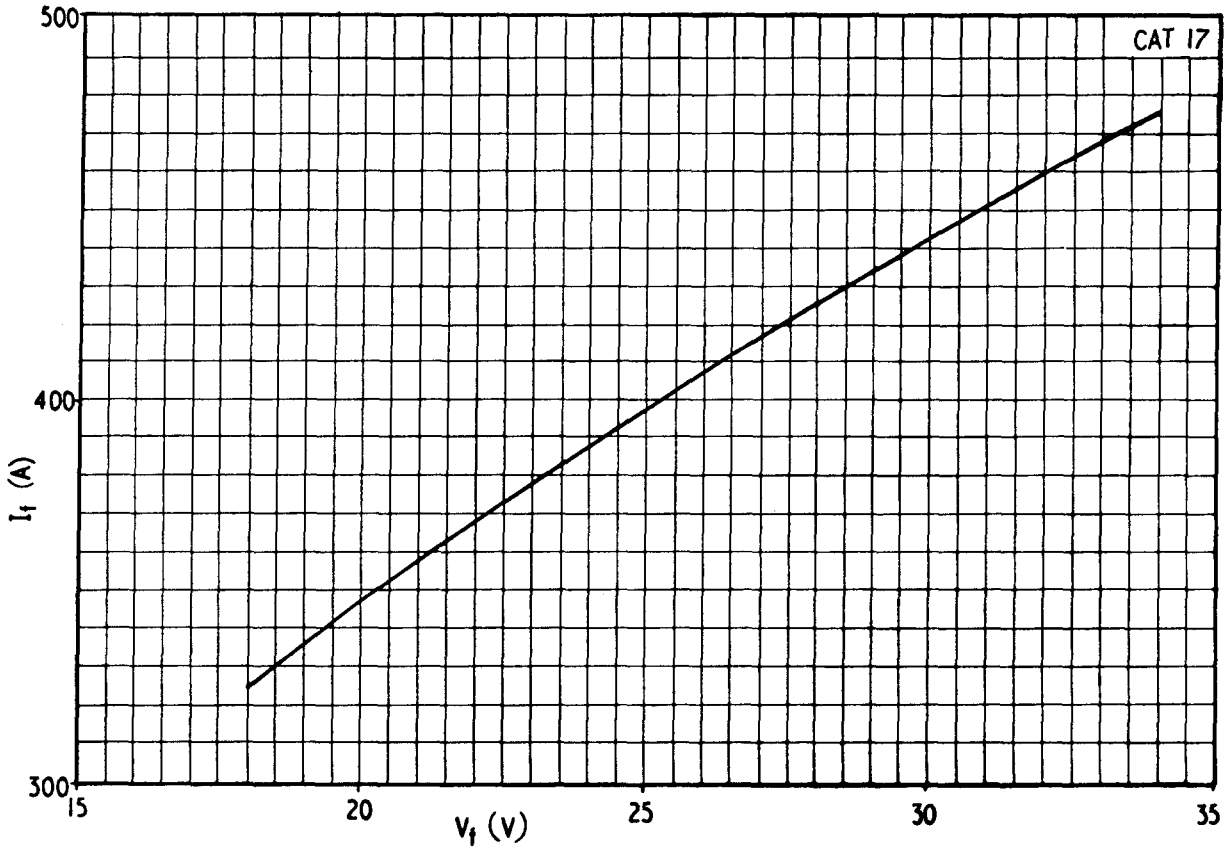
CAT 17
500
400
300
I_f (A)
15
20
25
30
35
V_f (V)

PRINTED IN ENGLAND