Triodes *Types CAT14 and CAT14C*

(HF AMPLIFIERS)

General. Water-cooled anode transmitting triodes, fitted with tungsten filaments, these valves are suitable for use as high frequency amplifiers at frequencies up to 10 Mc/s.

They are designed for use in communication or RF heating equipments.

The two valves are identical except for filament lead cooling, the CAT14C having air-cooled leads and the CAT14 water-cooled leads.

Cooling. The anode forms part of the valve envelope and is designed for cooling by water circulated in direct contact with the envelope. The rated flow should not be less than 40 gallons per minute. The temperature of the cooling water at the outlet must not be greater than 150°F (65°C).

Each external valve filament lead of the CAT14 requires a water flow of 400 cc. per minute. The temperature of the cooling water must not exceed 122°F (50°C) at the outlet.

Each internal filament lead of the CAT14C requires a flow of air of approximately 8 cu. ft. per minute at a pressure equal to 5 in. water gauge.

The air flow to the anode seal cooling ring should be 4 cu. ft. per minute at a pressure equal to 4 in. water gauge.

All cooling supplies must be started before the application of any supply voltages, and must continue for at least 2 minutes after the removal of all supply voltages.

Filament Starting. The cold resistance of the filament is of the order of 0·0057 Ω. The filament current must never exceed 500 A at any time during the switching-on period. If the valve is operated for periods greater than 15 minutes without anode current flowing, the filament voltage must be reduced to one-half its normal value during the standby period.

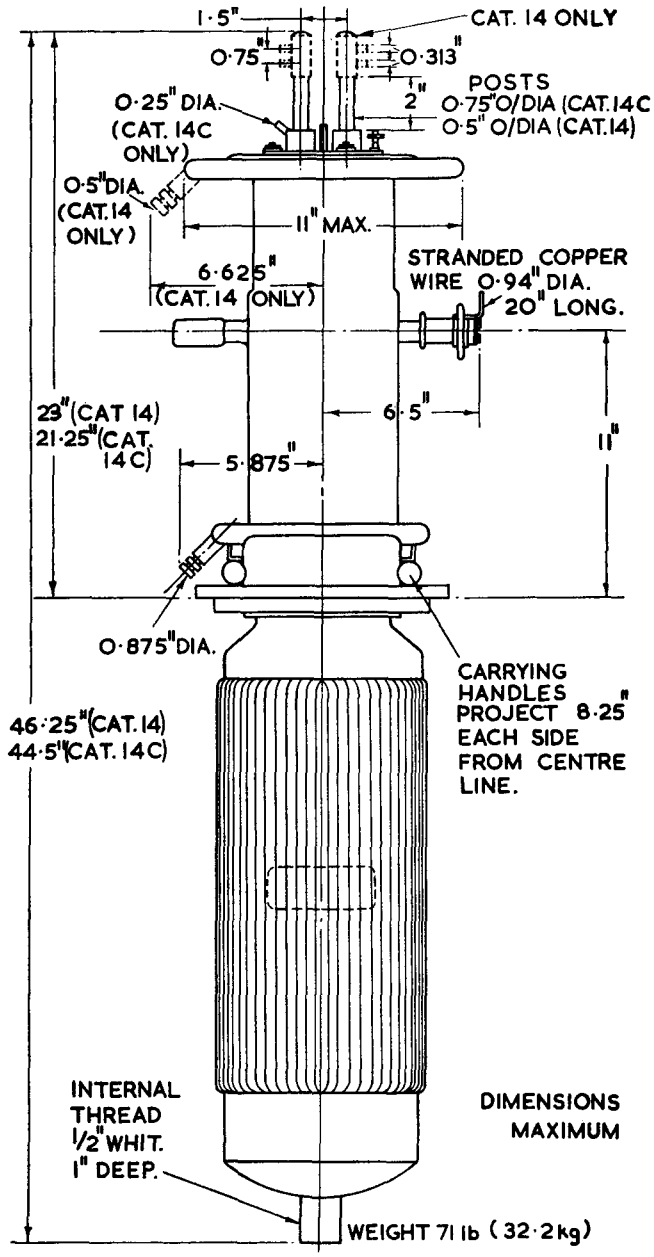

MARCONI'S WIRELESS TELEGRAPH COMPANY LIMITED

Marconi House, Chelmsford. Telephone: Chelmsford 3221. Telex: 1953. Telegrams: Expanse Chelmsford Telex

HT Switching. It is not permissible to apply directly HT voltage in excess of one-third the maximum rated anode voltage. At higher voltages the HT should be either gradually increased from a low value or three-position switching should be employed.

Mounting. The valve must be completely supported by its water jacket, which should be capable of adjustment so that the axis of the valve is truly vertical. Rigid connections must be made to the anode only.

Seasoning. Whenever a new valve is put into service, or when a valve has been idle for periods of approximately 2 months, it must be seasoned by operating for at least one hour at half the normal anode voltage and current. The anode voltage should then be increased slowly to normal value.

APPROXIMATE DATA

V_f		32·5	V*
I_f		460	A
V_a		20	kV
p_a		150	kW
p_{gl}		8	kW
$I_{gl\ (pk)}$		30	A
μ	taken at V_a 15 kV, V_{gl} −100 V	45	
r_a		900	
g_m		50	mA/V
$c_{a\text{-}gl}$		52	pF
$c_{a\text{-}k}$		4·5	pF
$c_{gl\text{-}k}$		100	pF

*Each valve is marked with the filament voltage to give 100 A emission at 90% saturation.

Typical Operation

(1) HF POWER AMPLIFIER AND OSCILLATOR. CLASS C TELEGRAPHY

(*Unmodulated, one valve, key down conditions*)

V_a		15	18	20	kV
I_a		18·8	18·8	18·8	A
V_{gl}		−950	−1,030	−1,070	V
I_{gl}	(a)	4·3	4·3	4·2	A
$v_{gl\ (pk)}$		2,650	2,730	2,770	V
P_{dr}	(a)	11·5	11·6	11·6	kW
Z_a		400	490	550	Ω
p_a		74	80	104	kW
P_{out}		209	258	272	kW

(2) HF POWER AMPLIFIER AND OSCILLATOR. CLASS C.

(*Anode modulated, one valve, carrier conditions, permissible modulation 100%*)

V_a		10	15	kV
I_a		9·6	9·8	A
V_{gl}		−895	−1,120	V
I_{gl}	(a)	1·9	1·8	A
$v_{gl\ (pk)}$		1,845	2,070	V
P_{dr}	(a) (b)	3·5	3·8	kW
Z_a		435	716	Ω
p_a		32	39	kW
P_{out}		64	108	kW

(3) HF POWER AMPLIFIER. CLASS B TELEPHONY

(*One valve, carrier conditions, permissible modulation 100%*)

V_a		10	15	kV
I_a		10·6	10·6	A
V_{gl}		−330	−440	V
$v_{gl\ (pk)}$		890	940	V
P_{dr}	(a) (b)	5·4	5·6	kW
Z_a		330	480	Ω
p_a		114	146	kW
P_{out}		46	67	kW

The figures quoted above are only applicable when operating at frequencies up to 3 Mc/s. At higher frequencies the anode voltage must be reduced according to the following table:

f (Mc/s)	3	5	10
% $V_{a(max)}$	100	80	60

NOTES

(a) Subject to wide variation. The figures given are approximate only.

(b) At crest of audio cycle with 100% modulation.

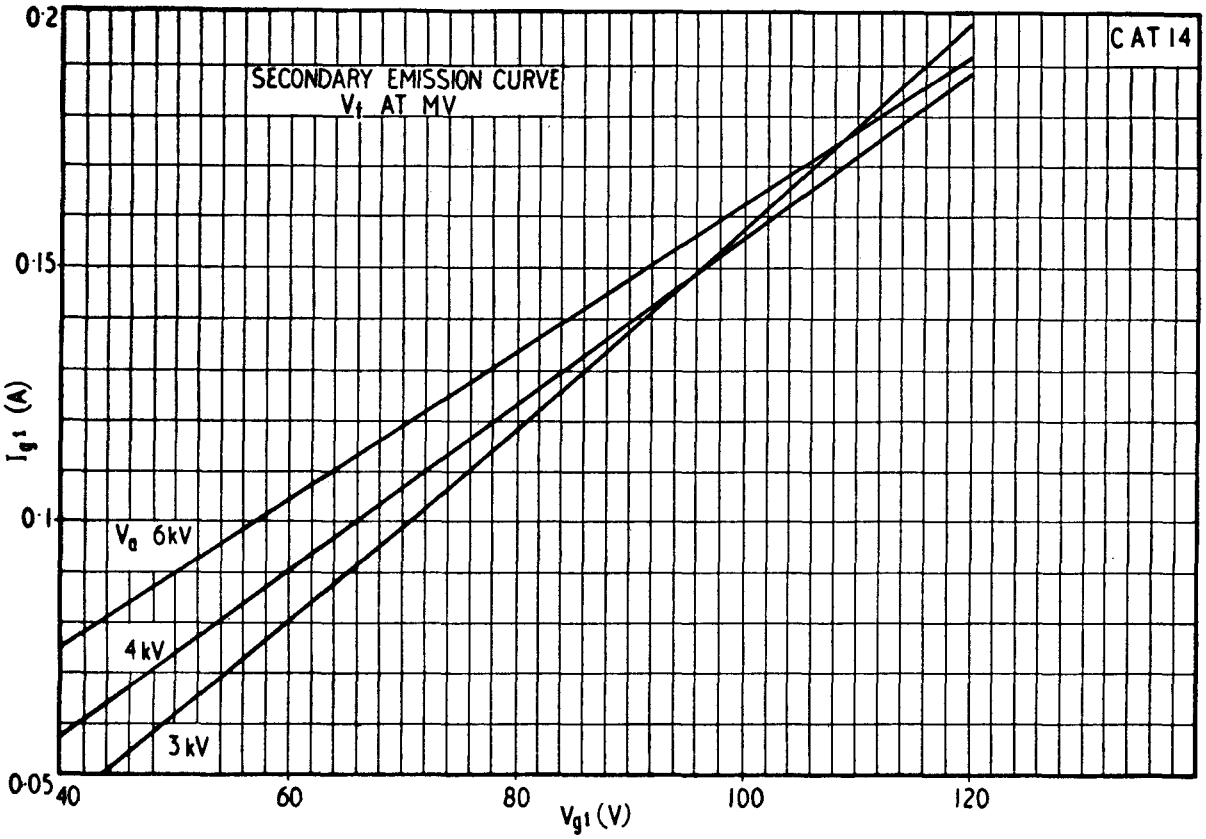
CAT 14
SECONDARY EMISSION CURVE
V_f AT MV
I_{g1} (A)
0·2
0·15
0·1
0·05
V_a 6kV
4 kV
3 kV
40
60
80
100
120
V_{g1} (V)

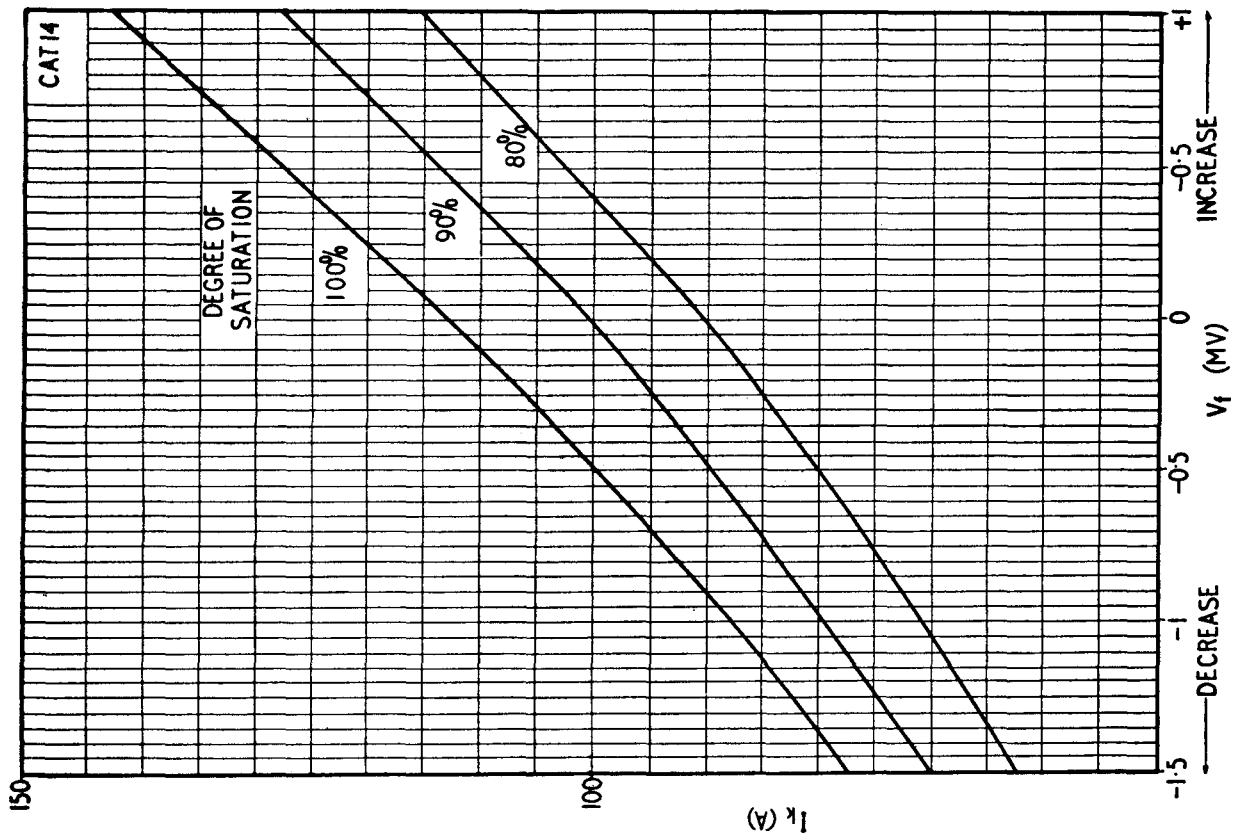
CAT14
DEGREE OF SATURATION
100%
90%
80%
150
100
I_k (A)
+1
−0·5
INCREASE
0
V_f (MV)
−0·5
−1
DECREASE
−1·5

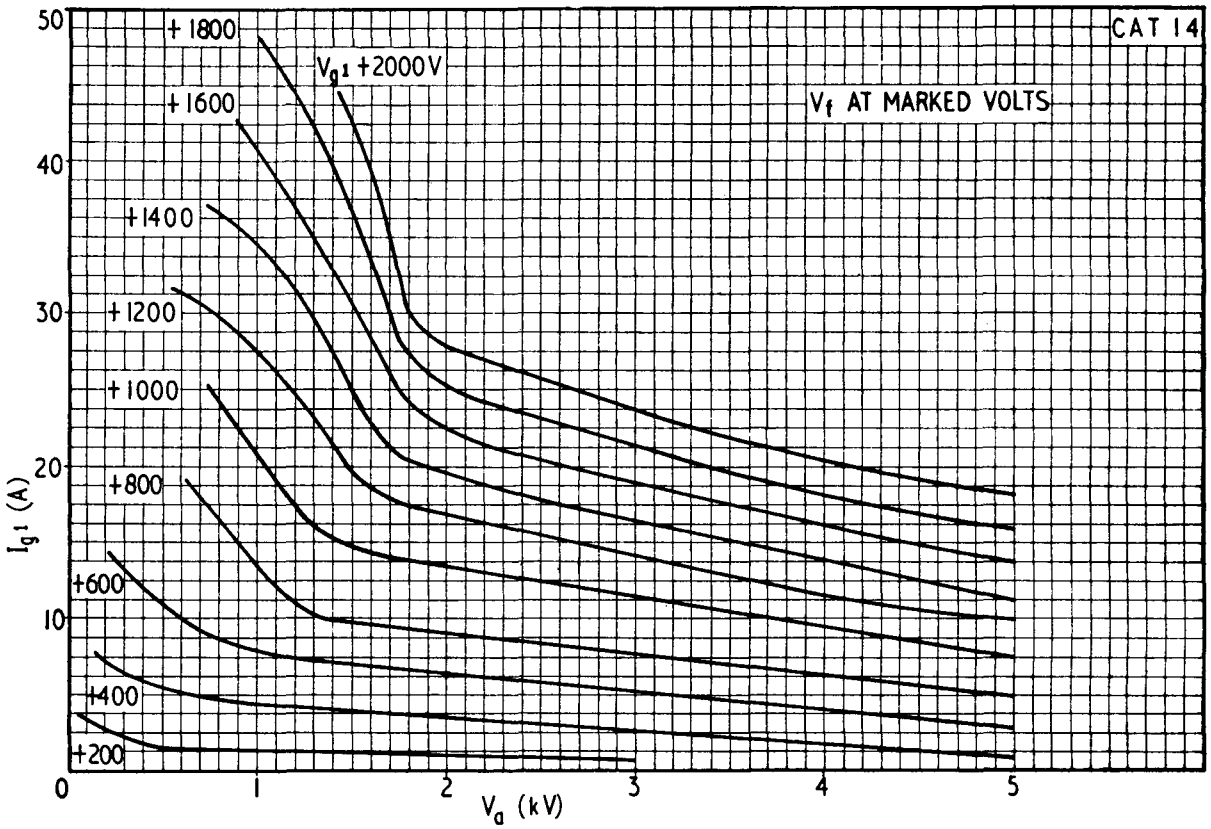
CAT 14
V_f AT MARKED VOLTS
V_{g1} +2000 V
+1800
+1600
+1400
+1200
+1000
+800
+600
+400
+200
I_{g1} (A)
V_a (kV)
0
1
2
3
4
5
10
20
30
40
50

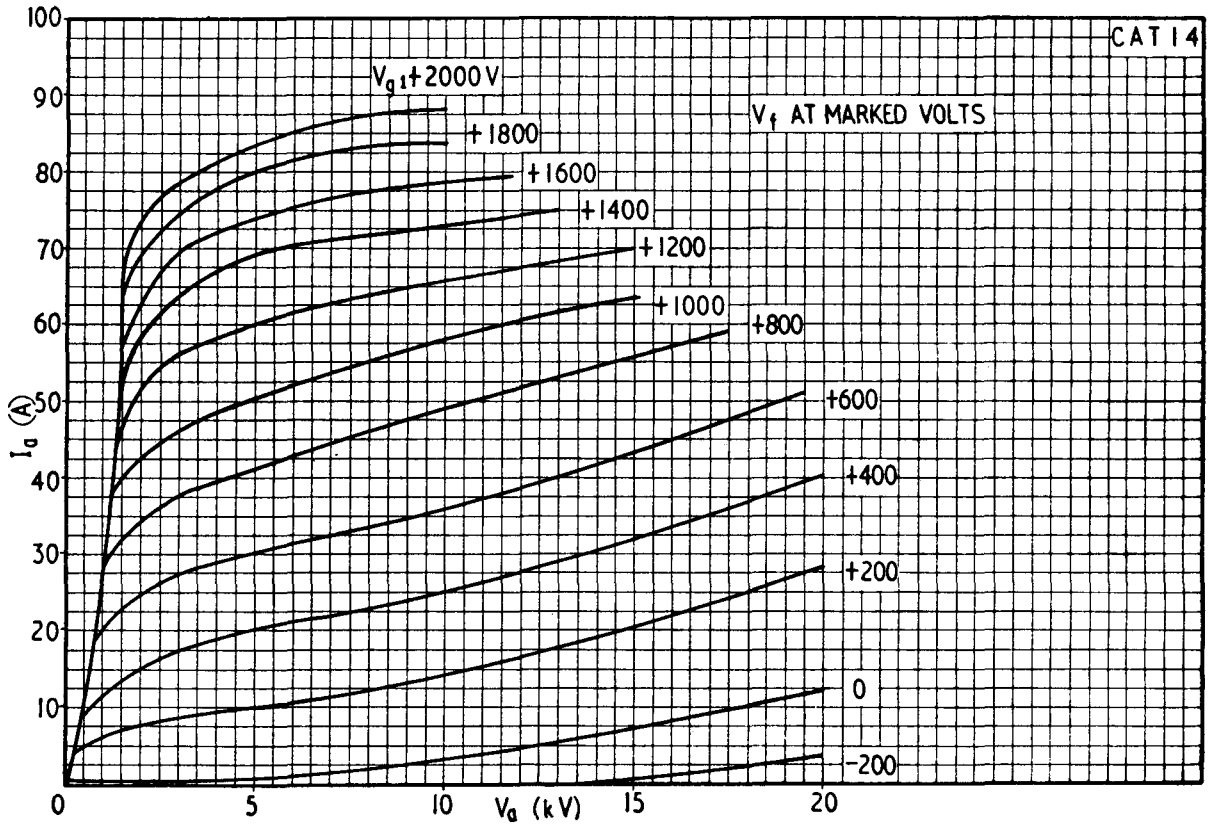
CAT 14
V_f AT MARKED VOLTS
V_{g1}+2000 V
+1800
+1600
+1400
+1200
+1000
+800
+600
+400
+200
0
-200
I_a (A)
V_a (kV)
0
5
10
15
20
10
20
30
40
50
60
70
80
90
100

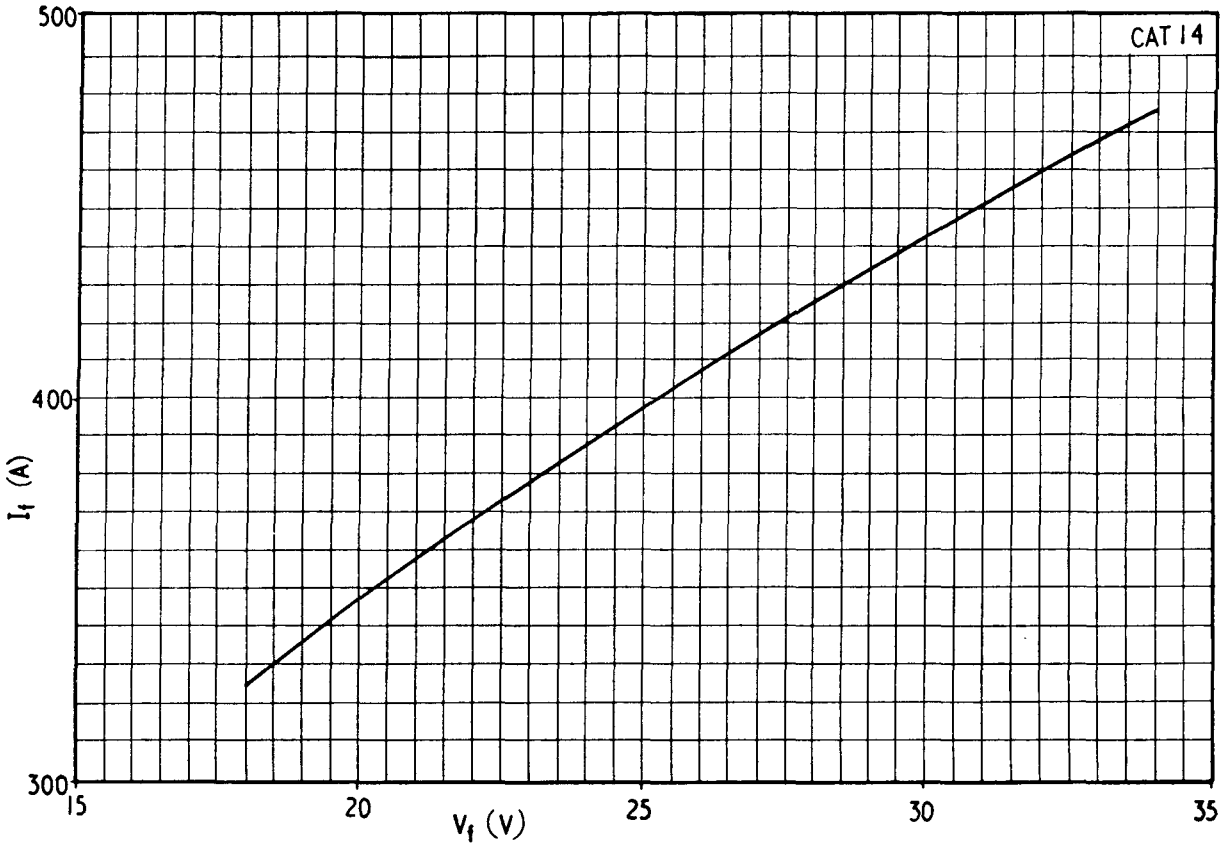
CAT 14
500
400
300
I_f (A)
15
20
25
30
35
V_f (V)

PRINTED IN ENGLAND