Diode *Type CAR6*

POWER RECTIFIER

General. A double-ended rectifying valve fitted with a tungsten filament. The anode forms part of the envelope and must be fitted with specially designed water jacket.

Cooling. The cooling supply must be started before the application of any voltages. The water flow to the anode must not be less than 5 gallons per minute. The temperature of the cooling water must not be greater than 65°C (150°F) at the outlet.

Filament Starting. The cold resistance of the filament is approximately 0·014 Ω. The filament current must not exceed 150 A at any time. It is not normally permissible to control the output by varying the filament voltage.

HT Switching. It is not permissible to apply directly a peak inverse voltage in excess of 25 kV. At higher voltages the applied voltage should either be gradually increased from a low value or two-position switching employed.

Mounting. The valve must be completely supported by its water jacket with its axis in a vertical position. Rigid connection must be made to the anode only.

APPROXIMATE DATA

V_f	20	V*
I_f	120	A
PIV $_{(max)}$	50	kV
p_a $_{(max)}$	20	kW

* The value of filament voltage for 10 and 20 A emission at 90% saturation is marked on each valve.

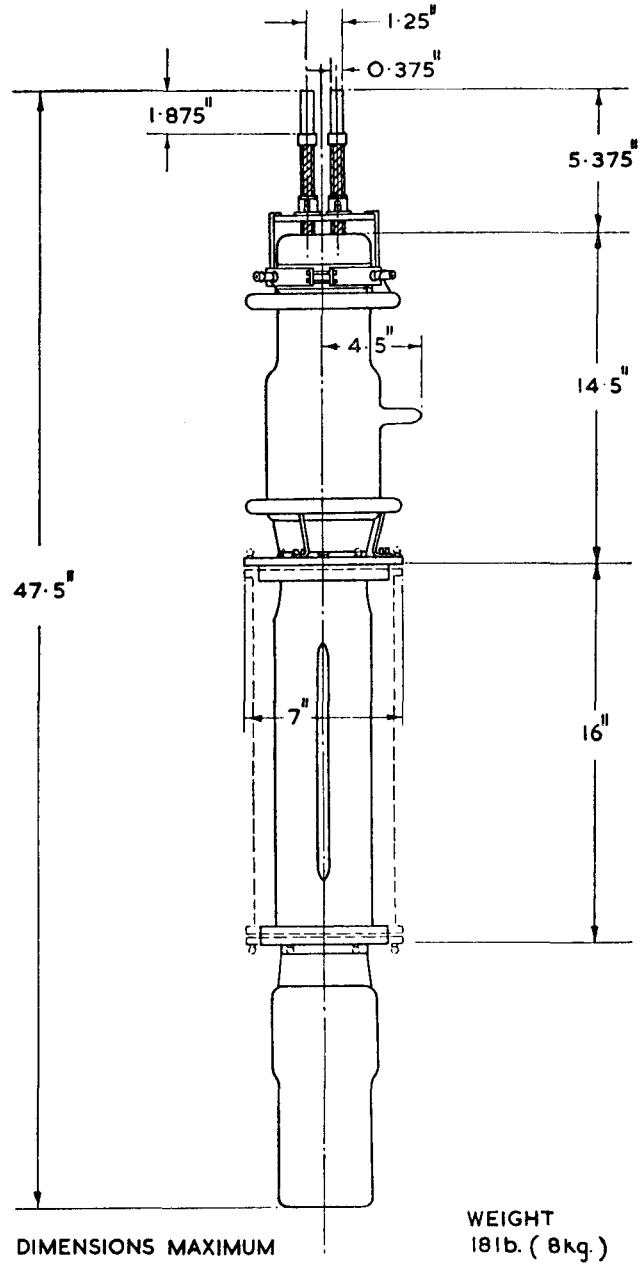

MARCONI'S WIRELESS TELEGRAPH COMPANY LIMITED

Head Office: Marconi House, Chelmsford, England. Telephone: Chelmsford 3221. Telegraphic Address: Expanse, Chelmsford

OPERATING DATA

(Full load conditions)

Circuit	No. of Valves	Output Voltage (kV)	Output Current (a) (A)	Output Current (b) (A)
Bi-phase half-wave	2	16	5·5	11
Single-phase full-wave	4	32	5·5	11
Three-phase half-wave	3	24	8·5	17
Three-phase full-wave	6	48	8·5	17
Double three-phase interconnected	6	24	17	34

This data is based on the assumption that the filter circuit is designed so that the ratio of the peak anode current to the rectified output current does not exceed 3·5: 1.

(a) V_f for $I_e = 10$ A.
(b) V_f for $I_e = 20$ A.

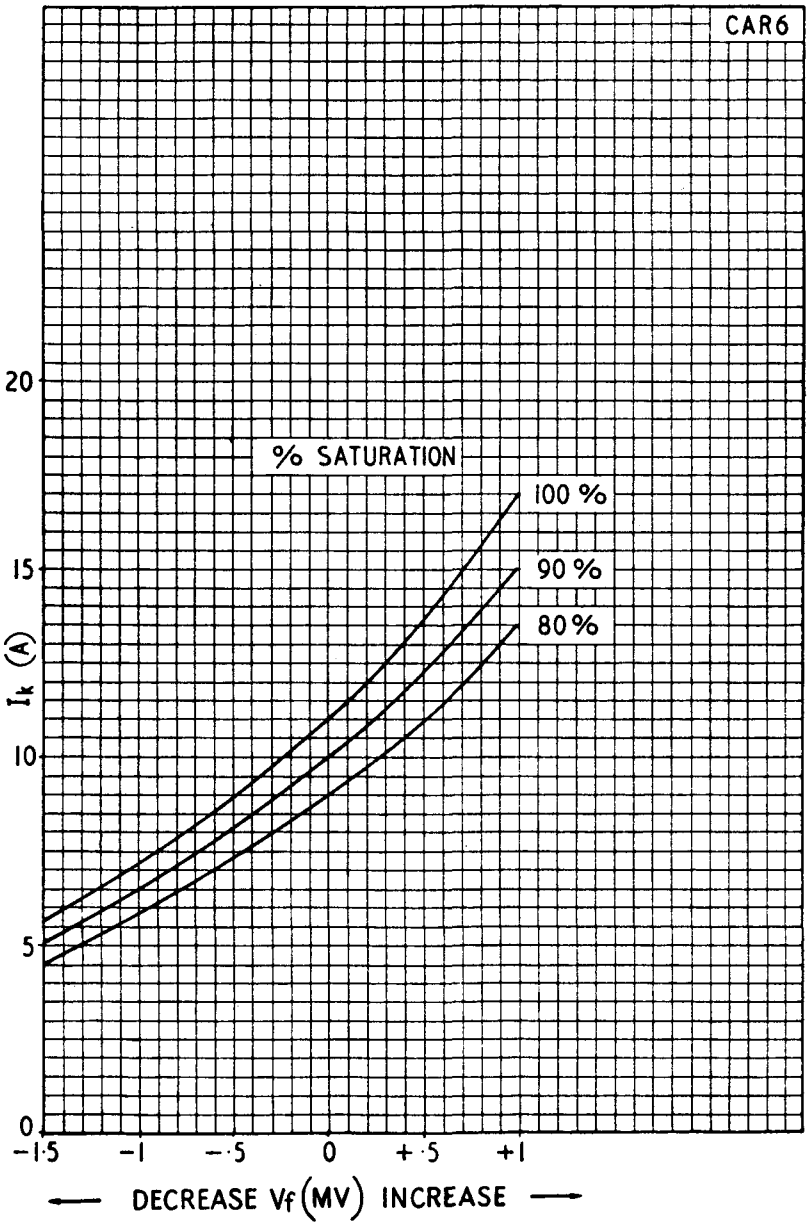
CAR6
% SATURATION
100 %
90 %
80 %
20
15
10
5
0
I_k (A)
−1·5
−1
−·5
0
+·5
+1
← DECREASE V_f (MV) INCREASE →

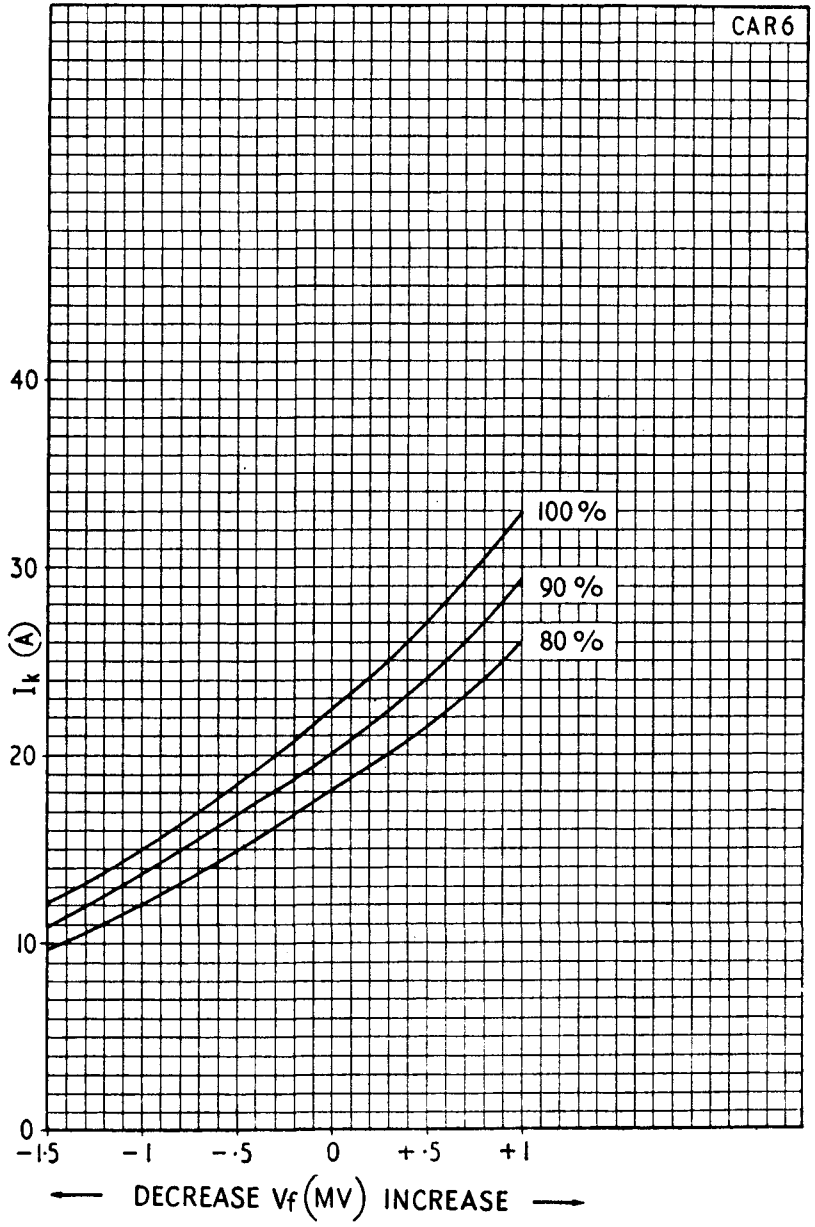
CAR6
100 %
90 %
80 %
40
30
20
10
0
I_k (A)
−1·5
−1
−·5
0
+·5
+1
← DECREASE V_f (MV) INCREASE →

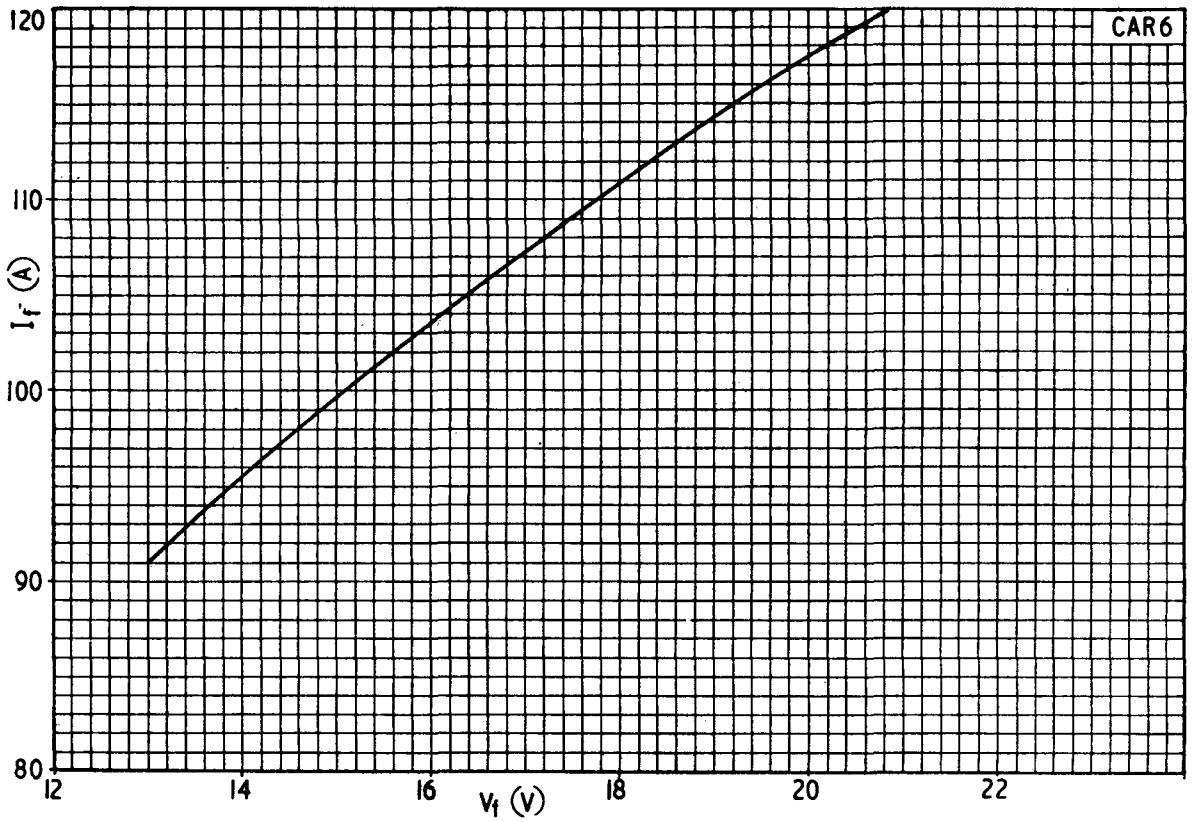

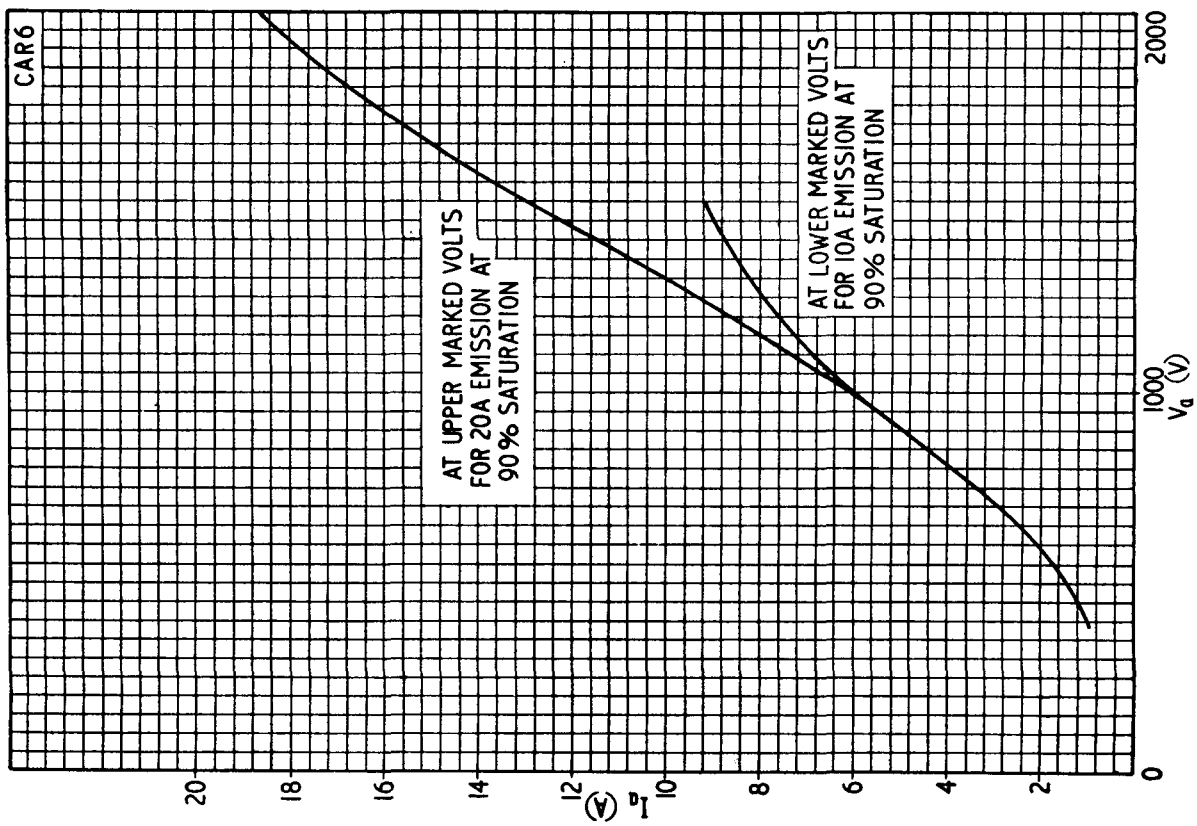

PRINTED IN ENGLAND