Twin Tetrode *Type C 180*

VHF POWER AMPLIFIER

General. The C 180 is a twin tetrode, suitable for use as a push-pull beam power amplifier.

Cooling. The bulb temperature must not exceed 175°C and if necessary forced-air-cooling must be employed.

APPROXIMATE DATA

(*values are for both units*)

	Series	Parallel	
V_h	12·6	6·3	V
I_h	0·8	1·6	A
g_m (taken at I_a=30 mA) (per unit)	3·5		mA/V
$\mu_{g1\text{-}g2}$	6·5		
$c_{a\text{-}g1}$ (with external shielding)	0·07		pF
c_{in}	8		pF
c_{out}	3·8		pF
$c_{g2\text{-}k}$ (including internal screen by-pass capacitor) (approx.)	65		pF
$f_{(max)}$	250		Mc/s

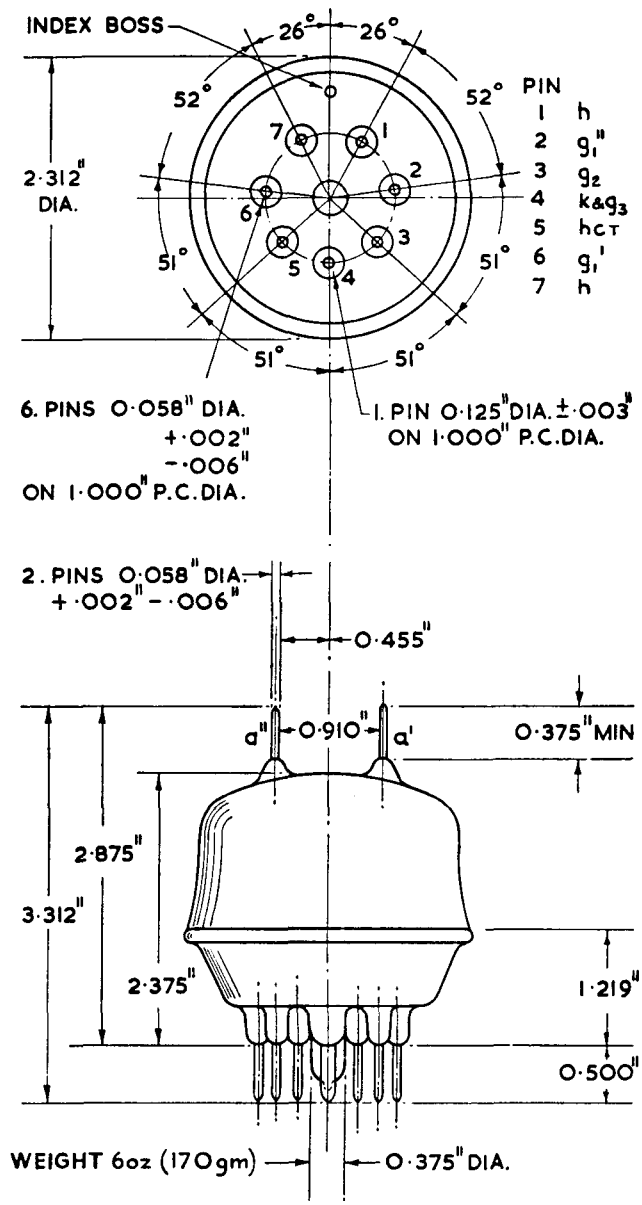

MARCONI'S WIRELESS TELEGRAPH COMPANY LIMITED

Head Office: Marconi House, Chelmsford, England. Telephone: Chelmsford 3221. Telegraphic Address: Expanse, Chelmsford

(1) PUSH-PULL HF POWER AMPLIFIER AND OSCILLATOR. CLASS C TELEGRAPHY

(*Unmodulated, one valve, key down conditions*) (a)

Maximum permissible ratings

V_a	750	V
V_{g2}	250	V
V_{g1}	−175	V
I_a	90	mA
I_{g1}	6	mA
$P_{a\ (in)}$	36	W
$P_{g2\ (in)}$	5	W
p_a	15	W
$V_{h\text{-}k\ (pk)}$ (b)	100	V

Typical Operation

V_a	500	750	V
V_{g2} (i) from a fixed supply of	200	200	V
(ii) via R_{g2}	21,000	37,000	Ω
V_{g1} (c)			
(i) from a fixed supply of	−65	−65	V
(ii) via $R_{k\text{-}}$	730	1,000	Ω
(iii) via $R_{g1\text{-}k}$	25,000	23,000	Ω
$v_{g1'\text{-}g1''\ (pk)}$	150	150	V
I_a	72	48	mA
I_{g2}	14	15	mA
I_{g1}*	2·6	2·8	mA
P_{dr}*	0·18	0·19	W
P_{out}*	26	26	W

(2) PUSH-PULL HF POWER AMPLIFIER CLASS C

(*Anode modulated, one valve, carrier conditions, permissible modulation* 100%)

Maximum permissible ratings

V_a	600	V
V_{g2}	250	V
V_{g1}	−175	V
I_a	75	mA
I_{g1}	6	mA
$P_{a\ (in)}$	22	W
$P_{g2\ (in)}$	3·4	W
p_a	10	W
$v_{h\text{-}k\ (pk)}$ (b)	100	V

Typical Operation

V_a	425	600	V
V_{g2} (i) from fixed supply of	200	200	V
(ii) via R_{g2}	14,000	25,000	Ω
V_{g1} (c) (i) from fixed supply of	−60	−65	V
(ii) via $R_{g1\text{-}k}$	25,000	25,000	Ω
$v_{g1'\text{-}g1''\ (pk)}$	140	150	V
I_a	52	36	mA
I_{g2}	16	16	mA
I_{g1}*	2·4	2·6	mA
P_{dr}*	0·15	0·18	W
P_{out}*	16	17	W

The maximum permissible ratings given above apply to frequencies up to 200 Mc/s. For operation up to 250 Mc/s the values of V_a and $P_{a\ (in)}$ must be reduced to 89% of the maximum permissible ratings.

NOTES

(a) Modulation essentially negative may be used if the positive peak of the audio frequency envelope does not exceed 115% of the carrier conditions.

(b) Heater either negative or positive with respect to cathode.

(c) The grid circuit resistance should never exceed 25,000 Ω (total) per valve, or 50,000 Ω per unit. If additional bias is necessary a cathode resistor or a fixed supply should be used.

* Subject to wide variation. Figures are approximate only.

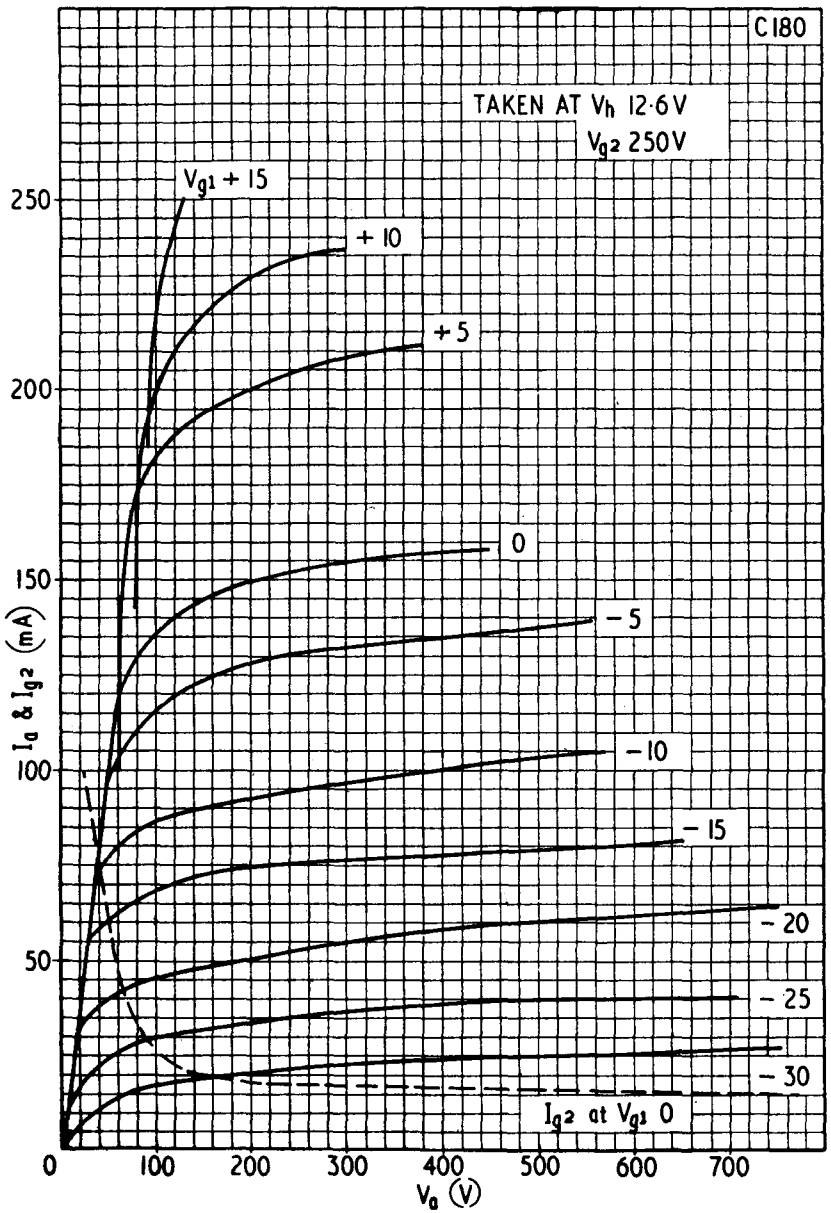
C180
TAKEN AT Vh 12·6V
Vg2 250V
Vg1 + 15
+ 10
+ 5
0
− 5
− 10
− 15
− 20
− 25
− 30
Ig2 at Vg1 0
Ia & Ig2 (mA)
Va (V)
0
50
100
150
200
250
100
200
300
400
500
600
700

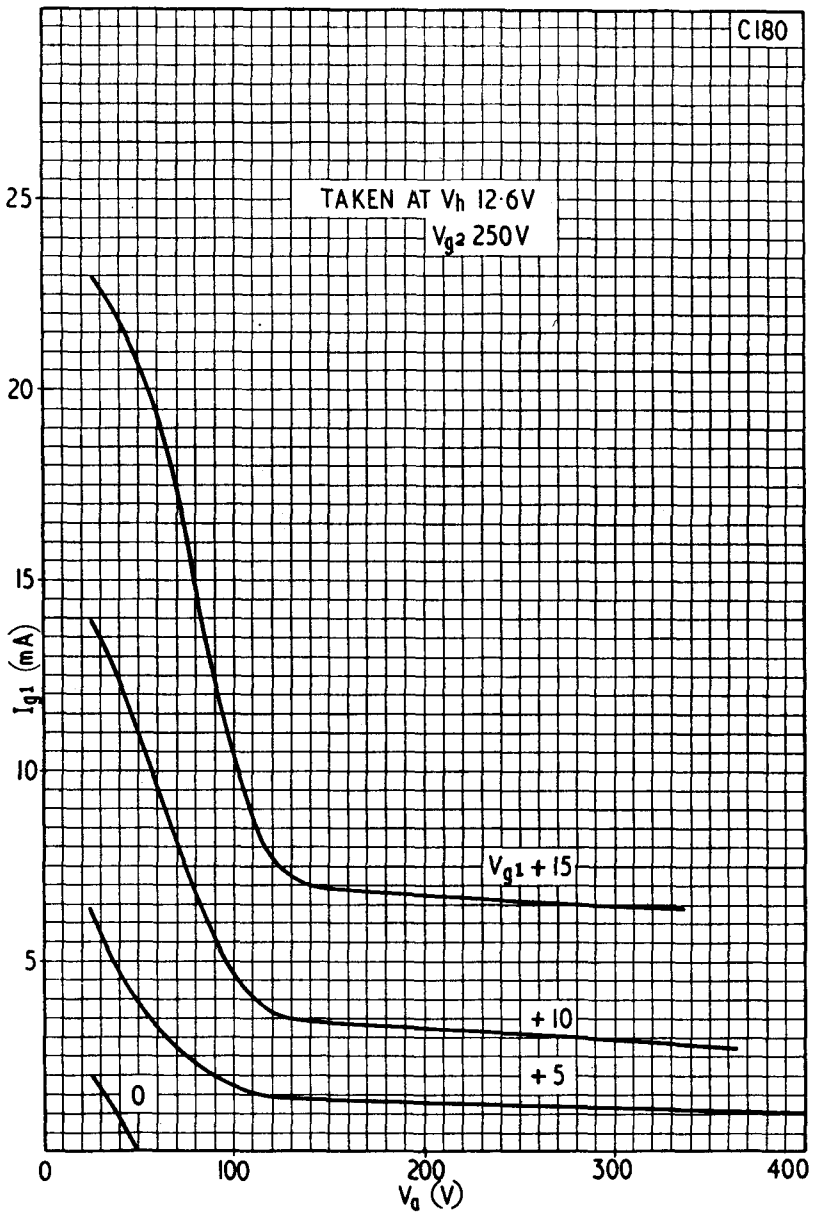
C180
TAKEN AT Vh 12·6V
Vg2 250V
Vg1 + 15
+ 10
+ 5
0
Ig1 (mA)
Va (V)
0
5
10
15
20
25
100
200
300
400

PRINTED IN ENGLAND