Twin Tetrode *Type C144*

HF POWER AMPLIFIER

General. A push-pull beam tetrode fitted with an indirectly heated cathode, suitable for use as an HF power amplifier at frequencies up to 200 Mc/s.

Cooling. Forced air cooling is recommended to keep the bulb temperature below 175°C.

APPROXIMATE DATA

Unless otherwise stated values are for both units

	Series		*Parallel*
V_f	12·6		6·3 V
I_f	1·125		2·25 A
$V_{a\,(max)}$		750 V	
$V_{g2\,(max)}$		225 V	
$p_{a\,(max)}$		40 W	
$\mu_{g1\text{-}g2}$	Per unit		8·5 mA/V
g_m	taken at I_a 60 mA		9
$c_{g1\text{-}a}$ (with external shielding)		0·12 pF	
C_{in}		14·5 pF	
C_{out}		7·0 pF	
$c_{g2\text{-}k}$ (including internal screen by-pass condenser)		65 pF (approx.)	

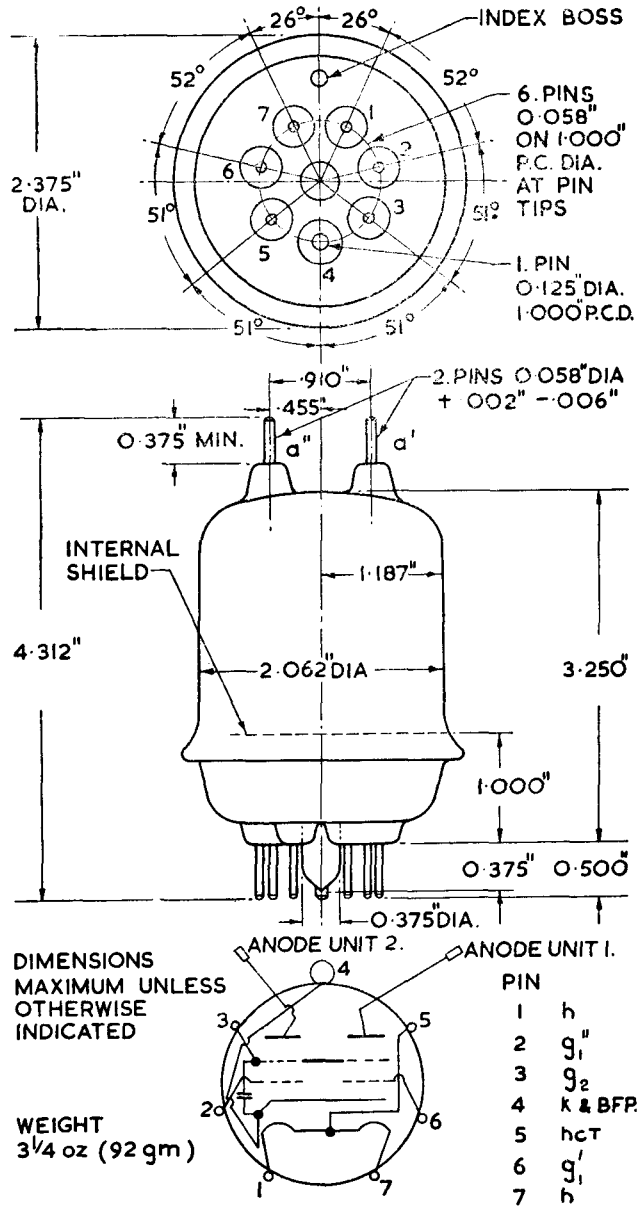

BASE B7A (SEPTAR)

MARCONI'S WIRELESS TELEGRAPH COMPANY LIMITED

Head Office: Marconi House, Chelmsford, England. Telephone: Chelmsford 3221. Telegraphic Address: Expanse, Chelmsford

PUSH-PULL RF POWER AMPLIFIER AND OSCILLATOR, CLASS C TELEGRAPHY

(One valve, unmodulated, key down conditions)

Maximum permissible ratings (a)

V_a		750	V
V_{g2}		225	V
V_{g1}		−175	V
I_a		240	mA
I_{g1}		15	mA
P_{in}		120	W
p_{g2}		7	W
p_a		40	W
Typical Operation			
V_a	500	750	V
I_a	240	160	mA

V_{g2}				
from a fixed supply of		200	200	V
via R_{g1}		9,300	18,300	Ω
I_{g2}		32	30	mA
V_{g1}				
from a fixed supply of		−45	−55	V
via R_k		160	270	Ω
via R_{g1}	(b)	3,750	4,600	Ω
I_{g1}	(c)	12	12	mA
$v_{g1'-g1''(pk)}$		124	140	V
P_{dr}	(c)	0·7	0·8	W
P_{out}	(c)	83	87	W

NOTES

(a) Modulation essentially negative may be used if the positive peak of the audio frequency envelope does not exceed 115% of the carrier conditions.

(b) The grid circuit resistance should never exceed 15,000 Ω (total) per valve, or 30,000 Ω per unit. If additional bias is necessary, a cathode resistor or a fixed supply should be used.

(c) Subject to wide variation. The figures given are approximate only.

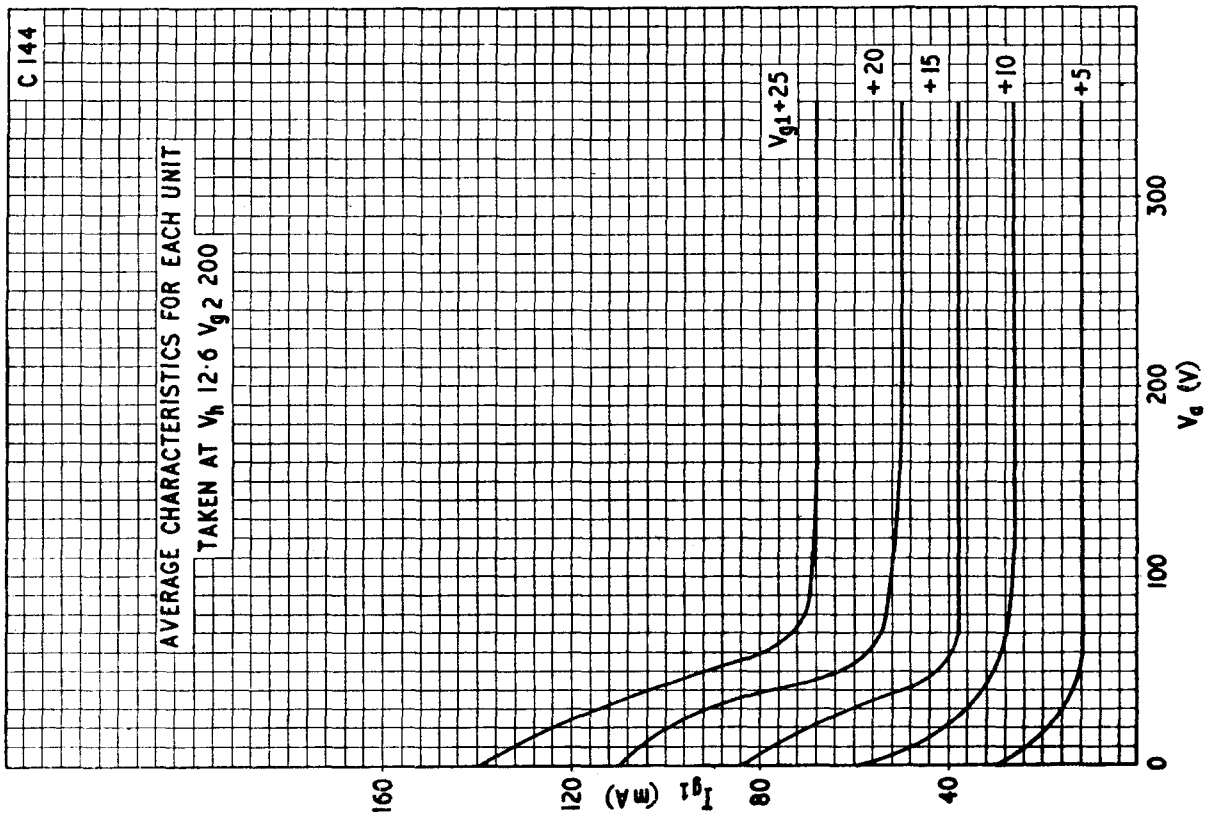
C144
AVERAGE CHARACTERISTICS FOR EACH UNIT
TAKEN AT V_h 12·6 V_{g2} 200
V_{g1}+25
+20
+15
+10
+5
I_{g1} (mA)
160
120
80
40
0
100
200
300
V_a (V)

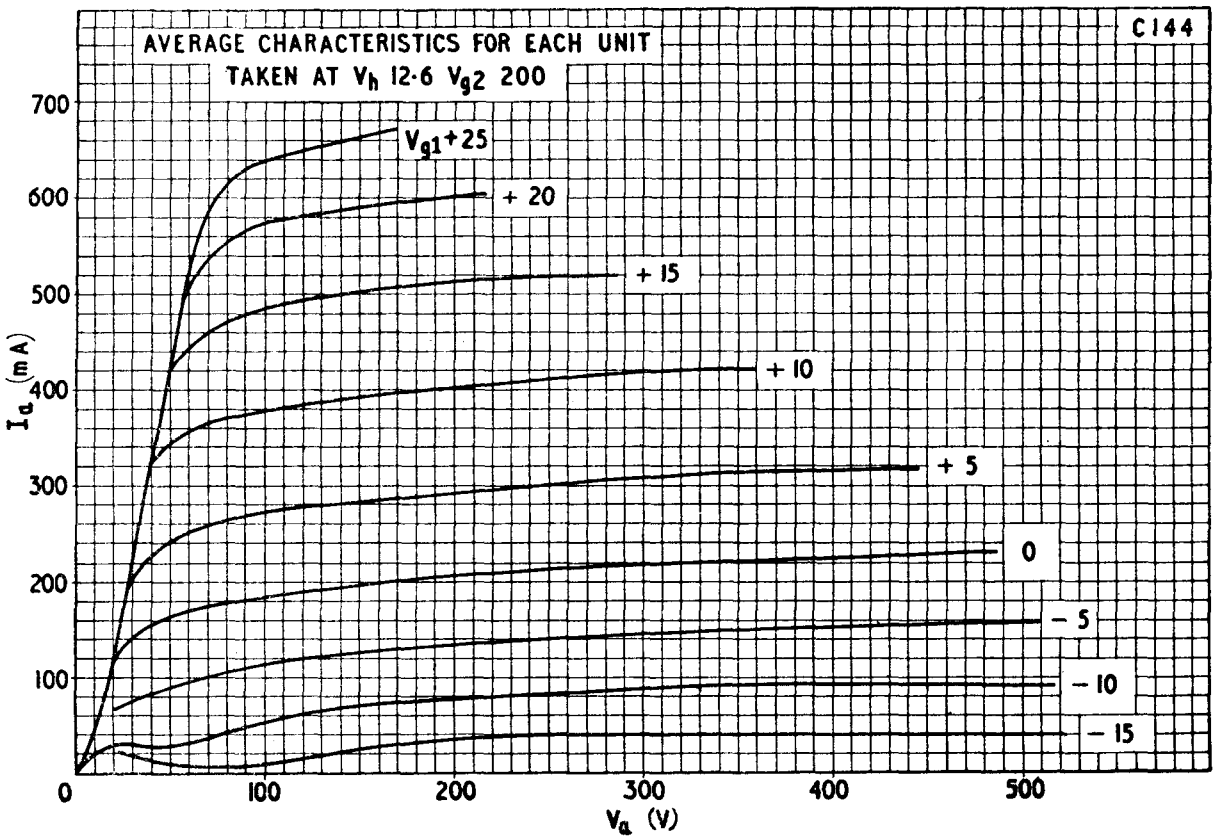
AVERAGE CHARACTERISTICS FOR EACH UNIT
TAKEN AT V_h 12·6 V_{g2} 200
C144
V_{g1}+25
+20
+15
+10
+5
0
−5
−10
−15
I_a (mA)
700
600
500
400
300
200
100
0
100
200
300
400
500
V_a (V)

PRINTED IN ENGLAND