BS456

S-BAND TR TUBE

Service Type CV2351

The data should be read in conjunction with the Duplexer Device Preamble.

DESCRIPTION

Broad-band single primer TR cell.

CHARACTERISTICS

Frequency range	2850 to 3050	MHz
V.S.W.R. (see note 1)	1.2:1	max
Maximum leakage:		
spike energy (see note 2)	25	nJ/pulse
total power (see note 3)	100	mW
low power	500	mW
Recovery period to −3db (see note 2)	15	μs max
Insertion loss (see note 4)	0.8	db max
Arc loss (see note 2)	0.8	db max
Position of short circuit (see notes 2 and 5)	0.062 inch (1.6mm) nom	

MAXIMUM AND MINIMUM RATINGS

	Min	Max	
Transmitter power (peak)	–	1250	kW
Primer supply voltage (negative) (see note 6)	900	1100	V
Primer current	70	150	μA
Waveguide pressure	–	300	kN/m²
	–	44	lb/in²
Ambient temperature (non-operating)	−40	+100	°C

GENERAL

Overall dimensions	5.890 x 5.890 x 4.469 inches nom *149.6 x 149.6 x 113.5mm nom*
Waveguide size	no. 10 (2.840 x 1.340 inches internal)
Coupler	NATO S.N. 5985-99-083-1560
Finish	flange faces tin or nickel plated
Mounting position	any
Net weight	4¼ pounds (1.9kg) approx

NOTES

1. Measured at a power level below 10mW over the frequency range.
2. Measured at 250kW peak power, 1.0μs pulse length and 0.001 duty factor.
3. For 1.0μs pulse.
4. Measured at a power level below 10mW at the centre of the frequency range.
5. Distance of the effective r.f. short circuit behind front flange.
6. The primer supply voltage must be applied at least 5 seconds before the tube is required to operate. The primer current must be limited by a series resistance of 5.5MΩ, of which at least 0.5MΩ must be adjacent to the primer terminal.

Outline Dimensions (All dimensions without limits are nominal)

Ref	Inches	Millimetres
A	5.875 ± 0.015	149.2 ± 0.38
B	4.469 ± 0.004	113.5 ± 0.1
C	3.000	76.20
D	3.000 ± 0.094	76.20 ± 2.39
E	0.156	3.96
F	2.500 max	63.50 max
G	1.500 max	38.10 max
H	1.500	38.10
J	0.260 ± 0.004	6.60 ± 0.10
K	5.375	136.5

Millimetre dimensions have been derived from inches except dimension J.

OUTLINE

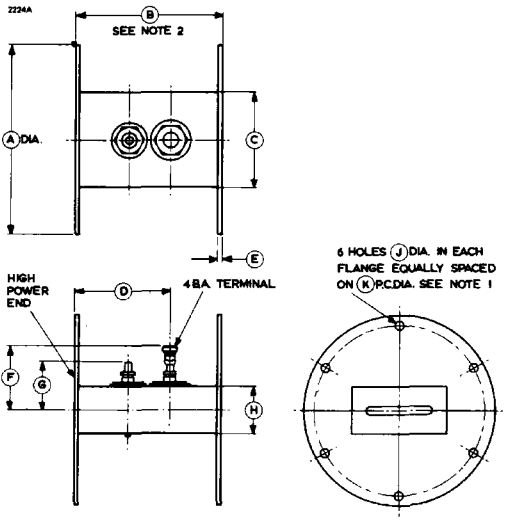

Outline Notes

1. The holes are equally spaced on the pitch circle diameter within 0.006 inch (0.15mm) positional tolerance zone diameter with respect to each other. The holes in each flange will be within 1° of twist and 0.020 inch (0.51mm) of lateral displacement.

   The flanges mate with NATO S.N. 5985-99-083-1560.

2. The two flange faces are flat and parallel within 0.004 inch (0.10mm).