Triode *Type BR 175*

HF AMPLIFIER AND OSCILLATOR

General. The BR 175 is a forced-air-cooled transmitting triode fitted with a tungsten filament.

Cooling. The anode requires forced air cooling. The characteristics given show the air inlet temperature °C/anode + grid loss, for the conditions of suction air cooling.

The temperature of the anode must not exceed 180°C.

The air flow must be started before the application of any supply voltage and should be continued, for at least one minute, after the removal of all supply voltages.

Filament Starting. The cold filament resistance is approximately 0·031 Ω. The filament current must not exceed 90 A at any time during the switching-on period.

APPROXIMATE DATA

V_f	22	V
I_f	60	A
$V_{a\ (max)}$	12·5	kV
$p_{a\ (max)}$	4	kW
$p_{gl\ (max)}$	0·6	kW
μ (taken at V_a 8 kV, I_a 0·5 A)	50	
$f_{(max)}$ (at full ratings)	50	Mc/s
$c_{a\text{-}gl}$	27	pF
$c_{a\text{-}k}$	1·5	pF
$c_{gl\text{-}k}$	39	pF

Marked Voltage. Each valve is marked with the filament voltage required to give 8·5 A peak emission at 90% saturation.

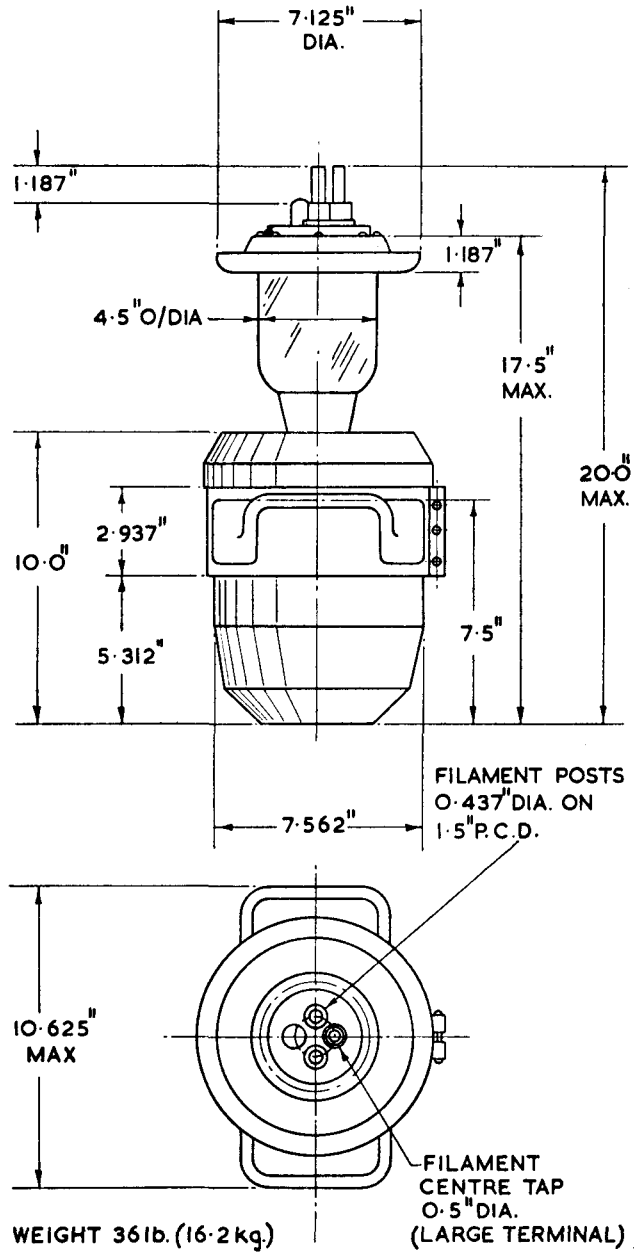

MARCONI'S WIRELESS TELEGRAPH COMPANY LIMITED

Head Office: Marconi House, Chelmsford, England. Telephone: Chelmsford 3221. Telegraphic Address: Expanse, Chelmsford

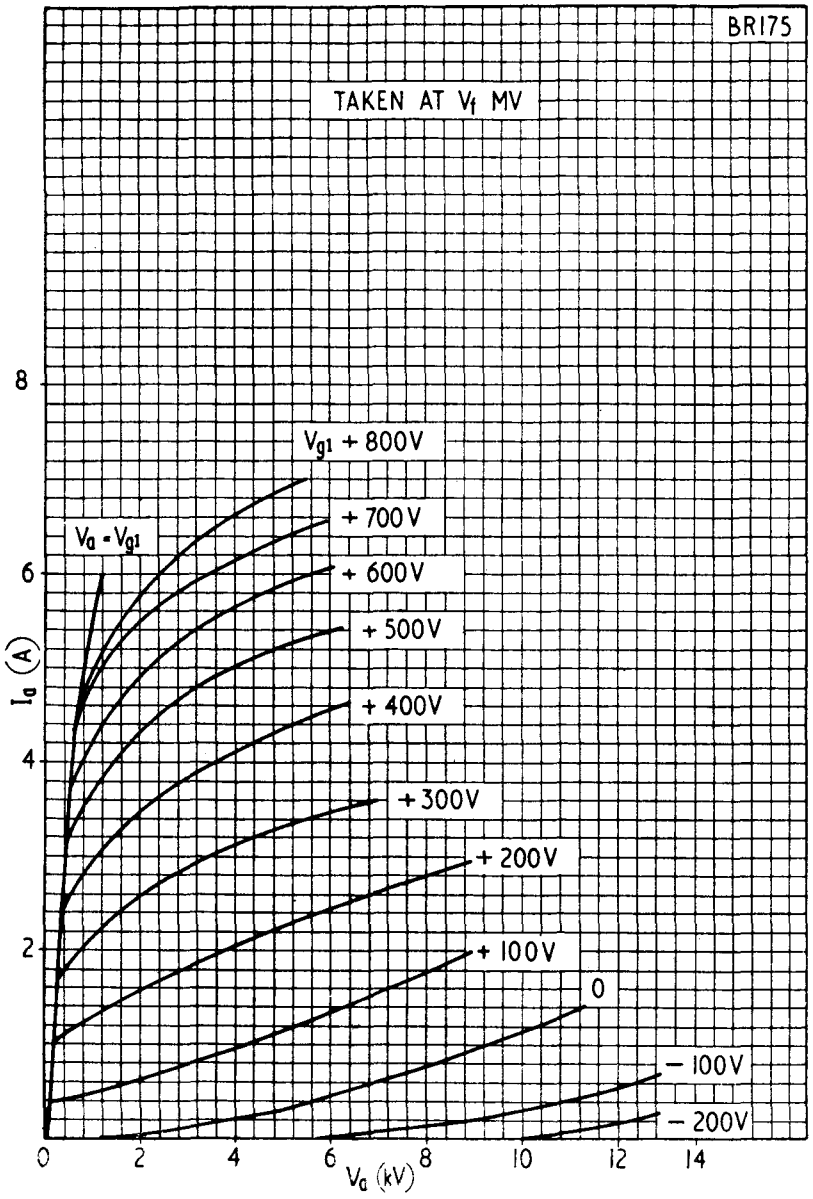
BR175
TAKEN AT V_f MV
V_{g1} + 800V
+ 700V
+ 600V
+ 500V
+ 400V
+ 300V
+ 200V
+ 100V
0
− 100V
− 200V
$V_a = V_{g1}$
I_a (A)
V_a (kV)
0
2
4
6
8
10
12
14

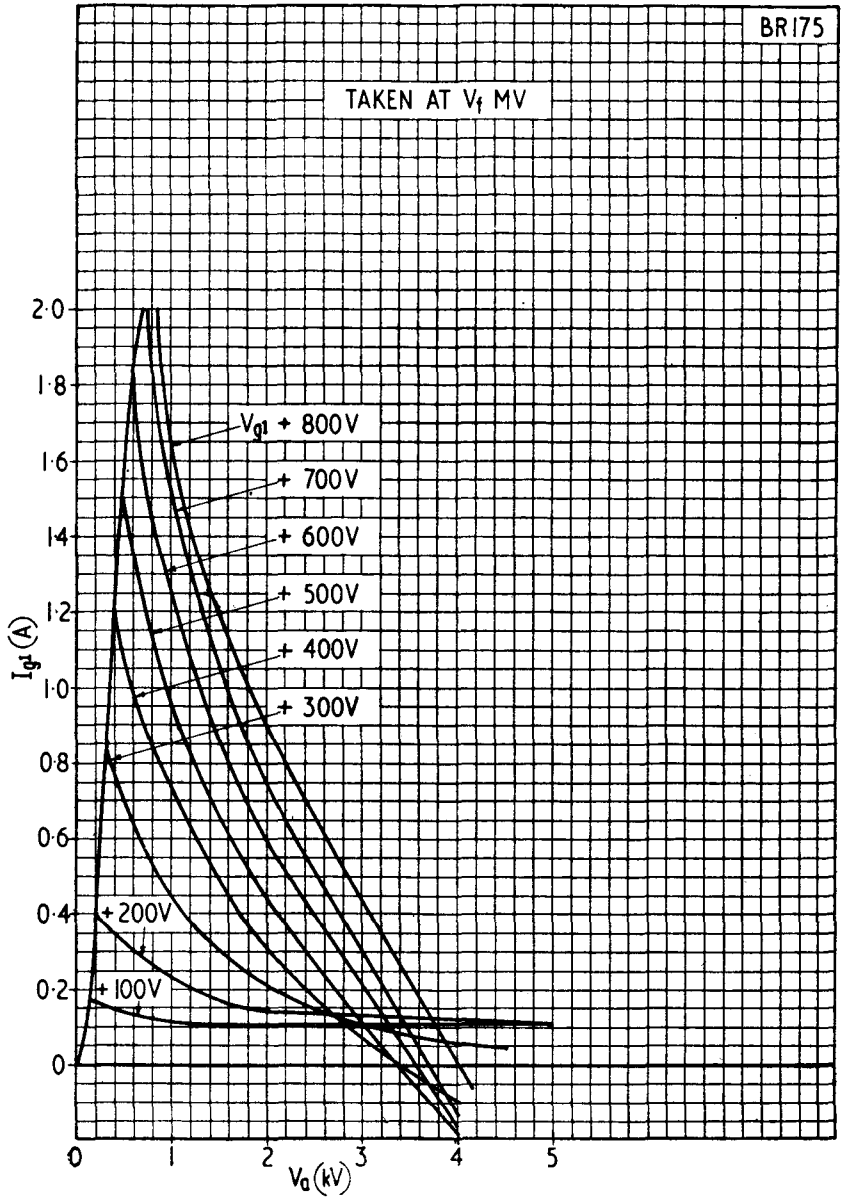
BR175
TAKEN AT V_f MV
V_{g1} + 800V
+ 700V
+ 600V
+ 500V
+ 400V
+ 300V
+ 200V
+ 100V
I_{g1} (A)
V_a (kV)
0
0·2
0·4
0·6
0·8
1·0
1·2
1·4
1·6
1·8
2·0
1
2
3
4
5

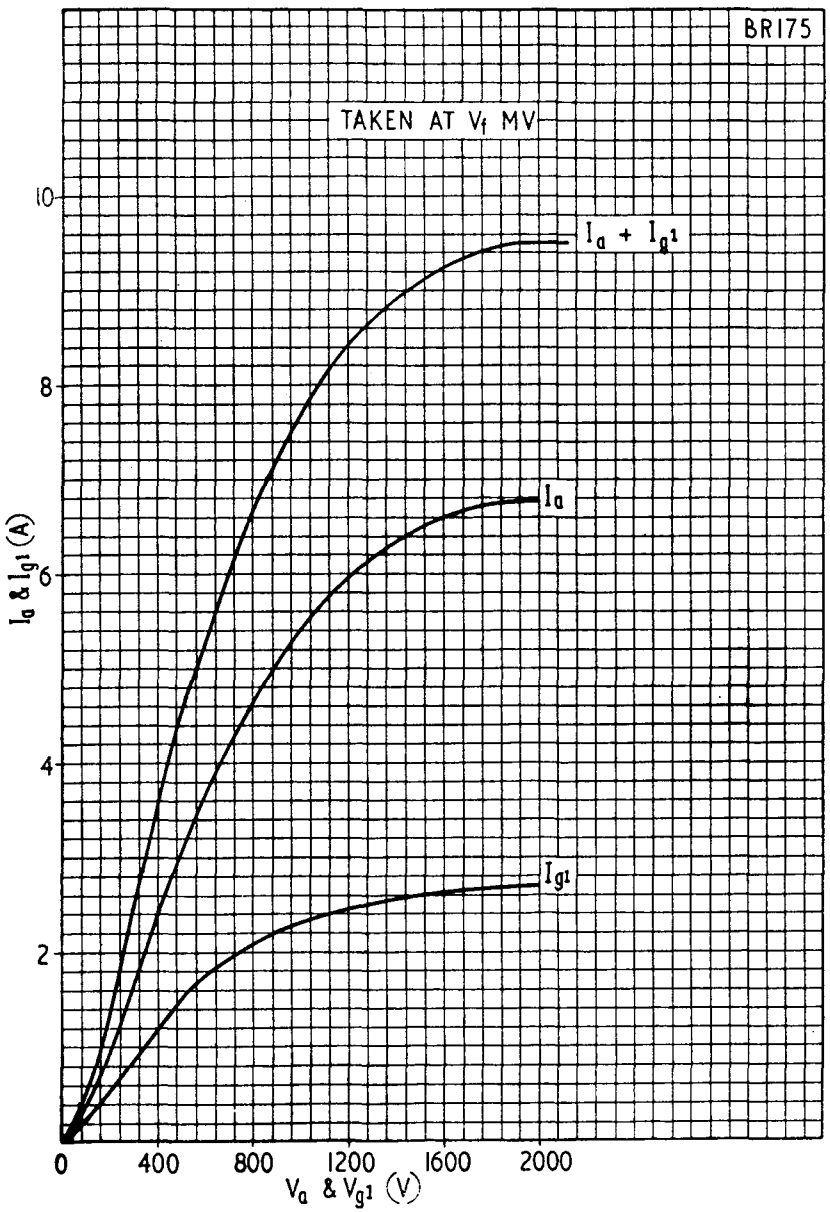
BR175
TAKEN AT V_f MV
$I_a + I_{g1}$
I_a
I_{g1}
I_a & I_{g1} (A)
10
8
6
4
2
0
400
800
1200
1600
2000
V_a & V_{g1} (V)

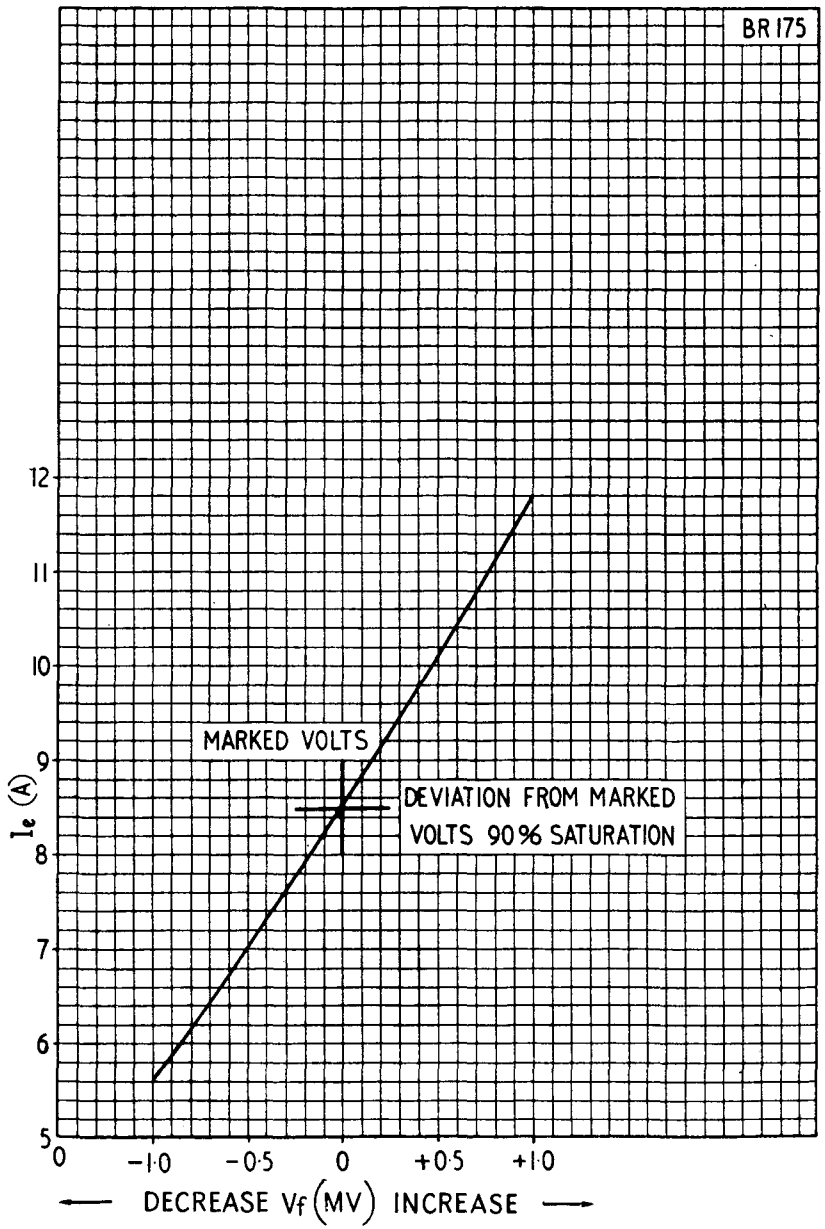
BR175
MARKED VOLTS
DEVIATION FROM MARKED VOLTS 90% SATURATION
I_e (A)
12
11
10
9
8
7
6
5
0
−1·0
−0·5
0
+0·5
+1·0
← DECREASE V_f (MV) INCREASE →

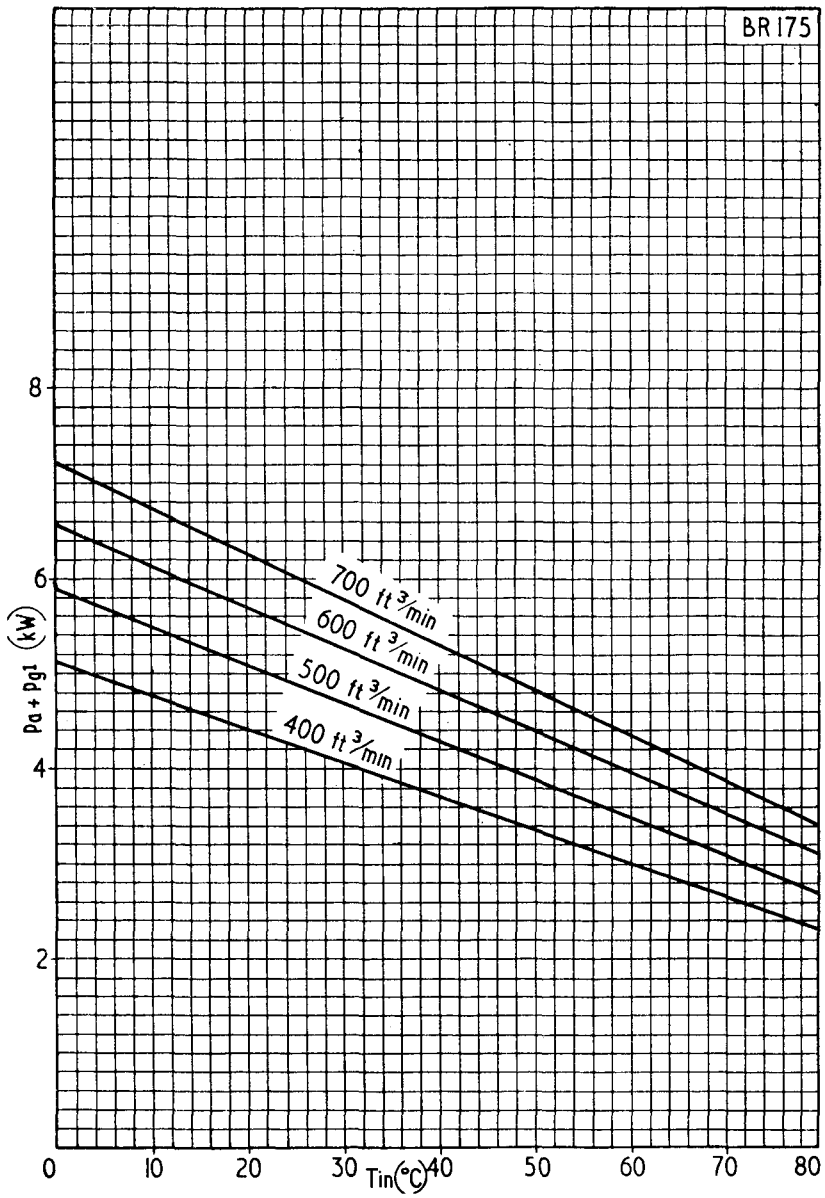

PRINTED IN ENGLAND