Triode *Type BR 129*

HF AMPLIFIER AND OSCILLATOR

General. The BR 129 is a forced-air-cooled transmitting triode fitted with a tungsten filament.

Cooling. The anode requires forced air cooling. The air cooling and air flow characteristics given show the air inlet temperature °C/anode+grid loss, and air flow/air pressure.

The grid and filament seals also require air cooling. The volume of air necessary is approximately 15 cu. ft. per minute, and should be directed on to the seals from above through a 1-in. nozzle. The temperature of the anode must not exceed 180°C and that of the seals must not exceed 140°C.

All air cooling supplies must be in operation before the application of any supply voltage and should be continued, for at least one minute, after the removal of all supply voltages.

Filament Starting. The cold filament resistance is approximately 0·007 Ω. The filament current must not exceed 187 A at any time during the switching on period.

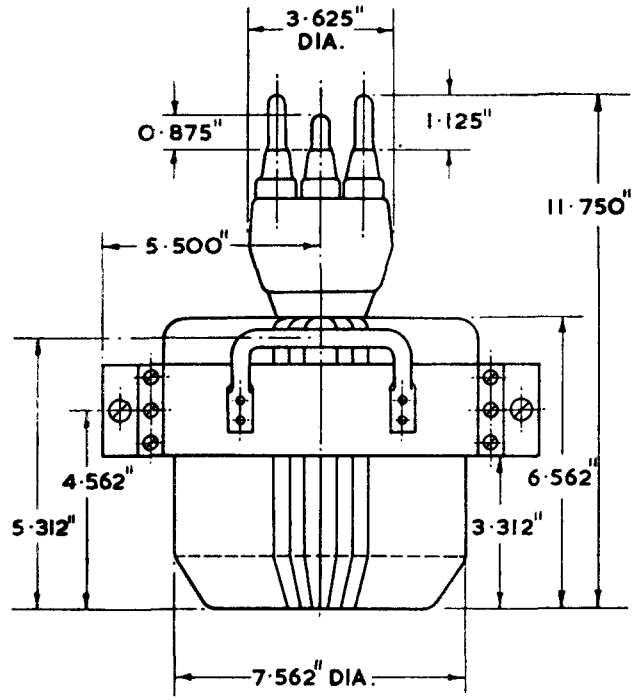

APPROXIMATE DATA

V_f		11	V
I_f		125	A
$V_{a\ (max)}$		8·5	kV
$p_{a\ (max)}$		5	kW
$p_{g1\ (max)}$		600	W
μ	taken at Va 5 kV, Ia 1A	21	
g_m	taken at Va 5 kV, Ia 1A	11	mA/V
f (max) (at full ratings)		40	Mc/s
C_{a-g1}		17·5	pF
C_{a-k}		2·7	pF
C_{g1-k}		23·3	pF

Marked Voltage. Each valve is marked with the filament voltage required to give 8·5 A peak emission at 90% saturation.

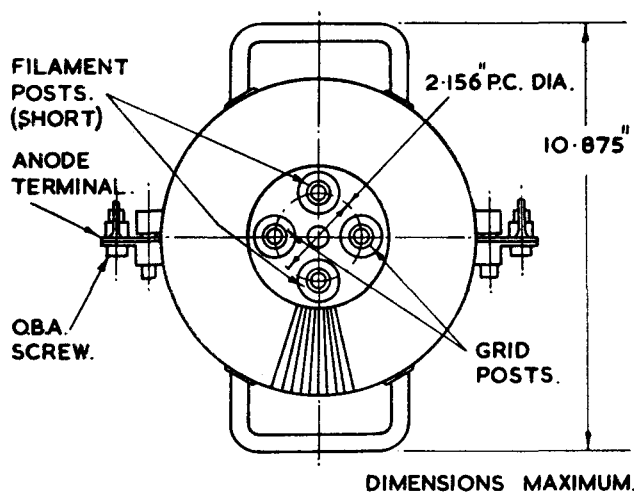

WEIGHT 37 lb. (16·8 kg.)

MARCONI'S WIRELESS TELEGRAPH COMPANY LIMITED

Head Office: Marconi House, Chelmsford, England. Telephone: Chelmsford 3221. Telegraphic Address: Expanse, Chelmsford

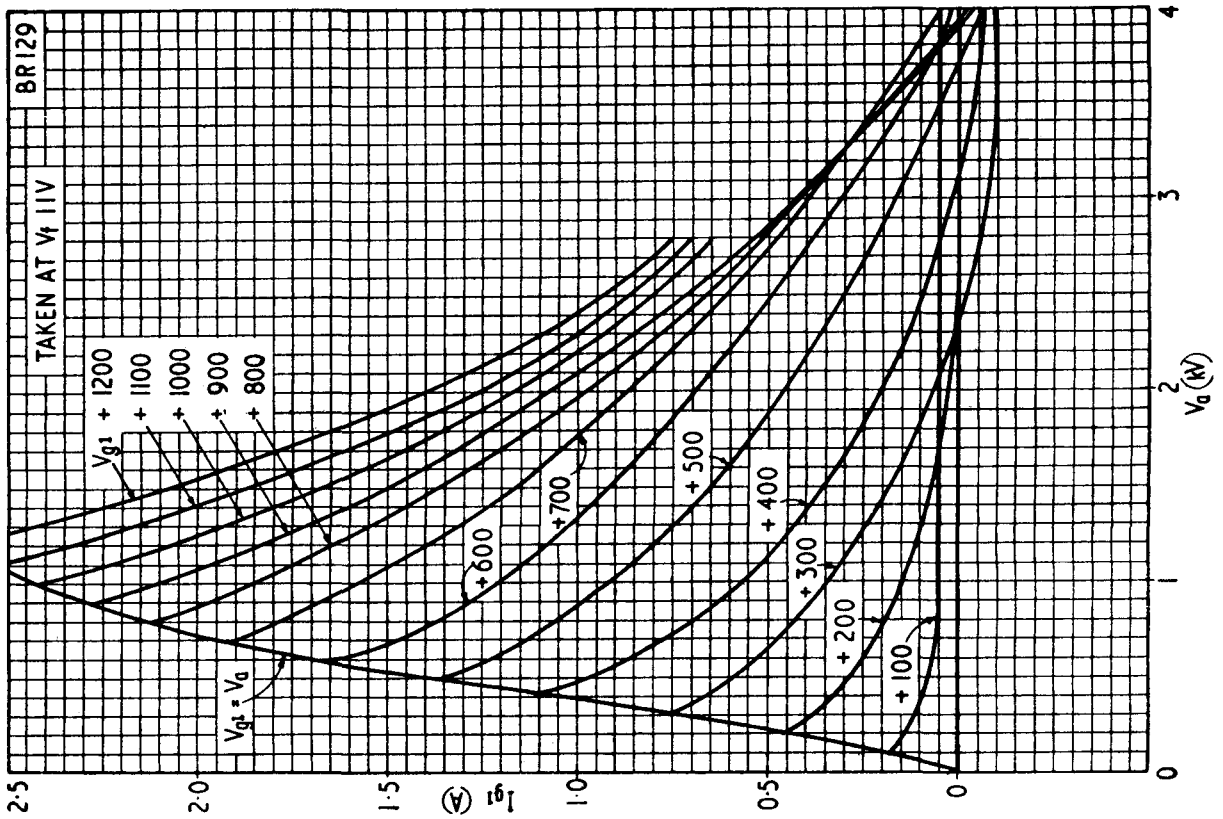
BR129
TAKEN AT V_f 11V
V_{g1} + 1200
+ 1100
+ 1000
+ 900
+ 800
+ 700
+ 600
+ 500
+ 400
+ 300
+ 200
+ 100
$V_{g1} = V_a$
I_{g1} (A)
V_a (kV)
2·5
2·0
1·5
1·0
0·5
0
1
2
3
4

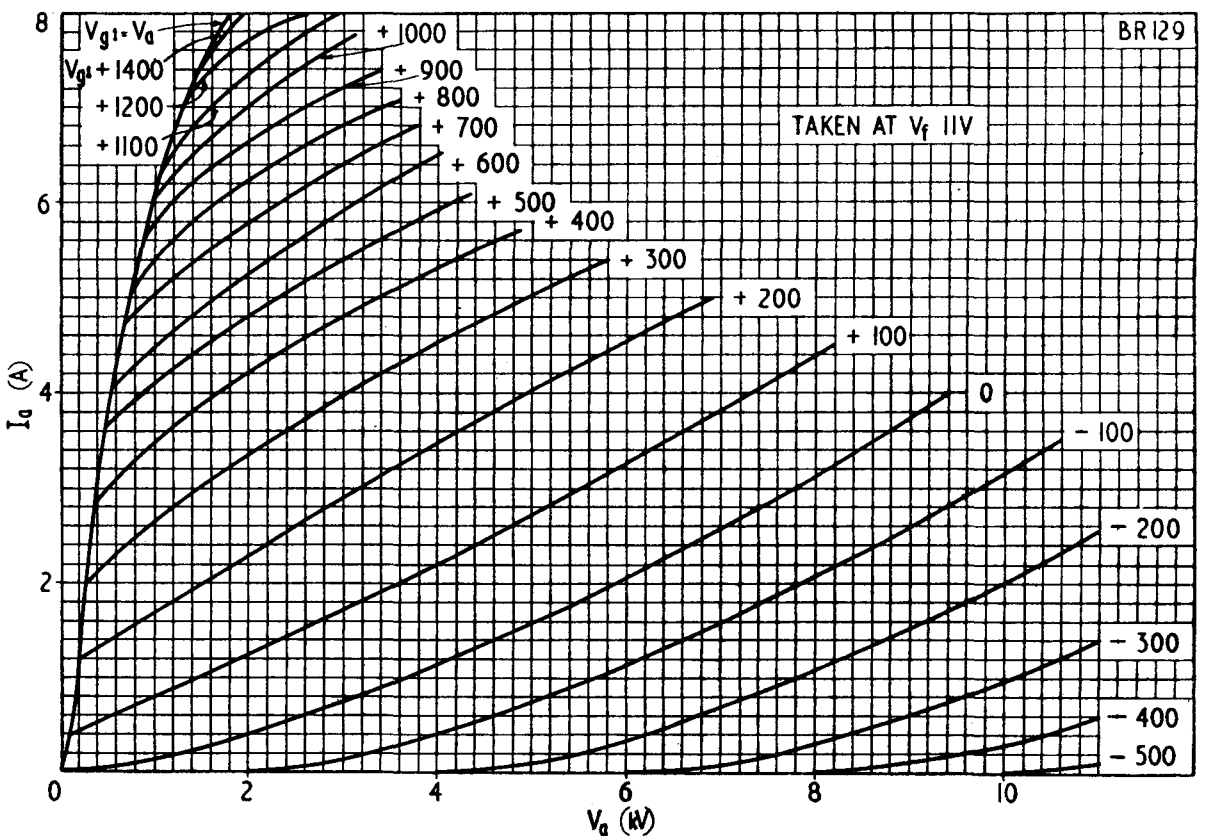
BR129
TAKEN AT V_f 11V
$V_{g1} = V_a$
V_{g1} + 1400
+ 1200
+ 1100
+ 1000
+ 900
+ 800
+ 700
+ 600
+ 500
+ 400
+ 300
+ 200
+ 100
0
− 100
− 200
− 300
− 400
− 500
I_a (A)
V_a (kV)
0
2
4
6
8
10

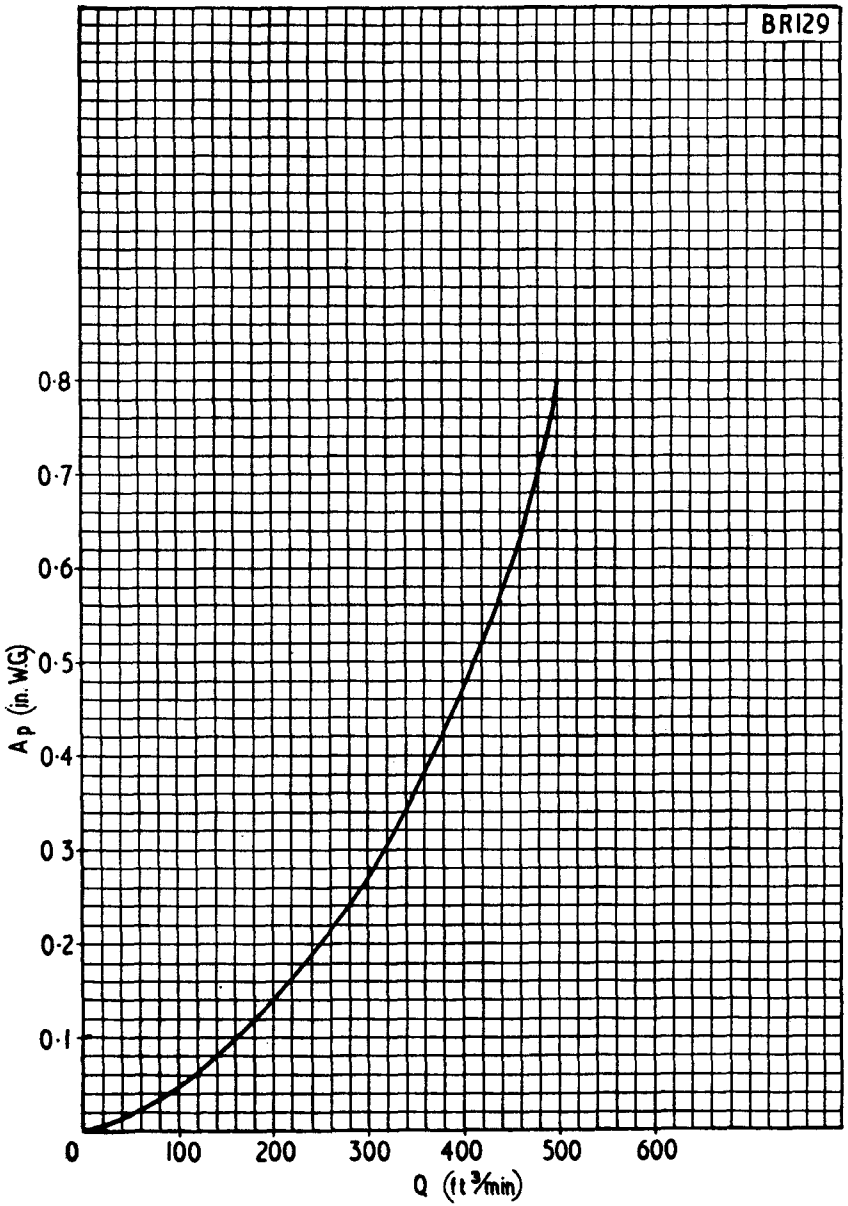
BR129
0·8
0·7
0·6
0·5
0·4
0·3
0·2
0·1
Ap (in. W.G)
0
100
200
300
400
500
600
Q (ft³/min)

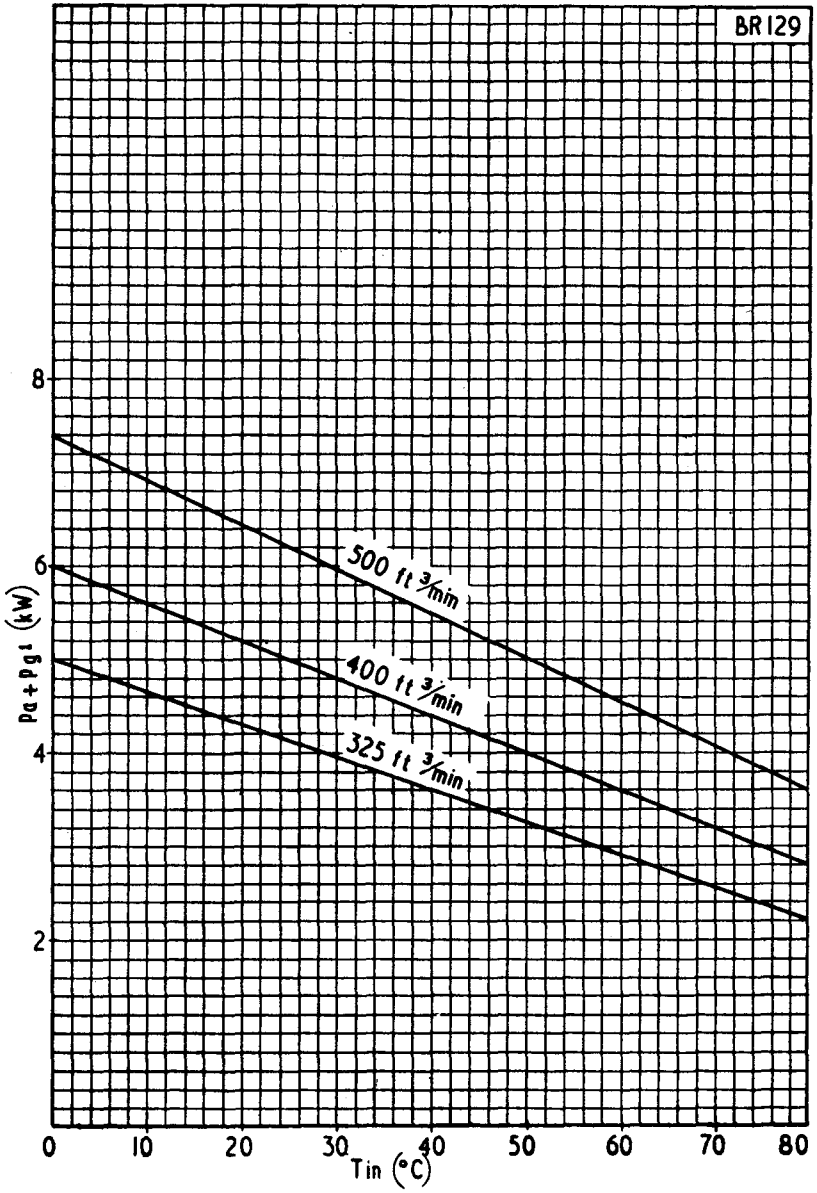
BR129
8
6
4
2
Pa+Pgt (kW)
500 ft³/min
400 ft³/min
325 ft³/min
0
10
20
30
40
50
60
70
80
Tin (°C)

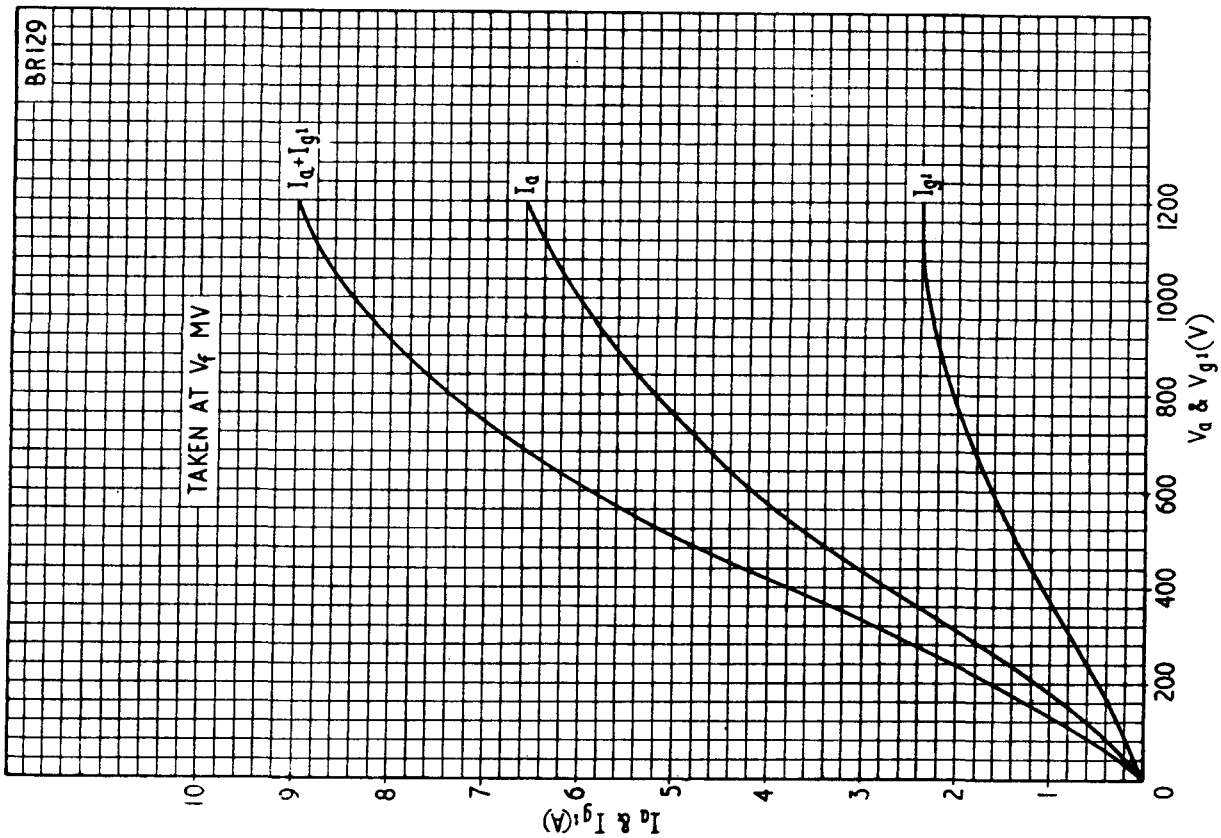

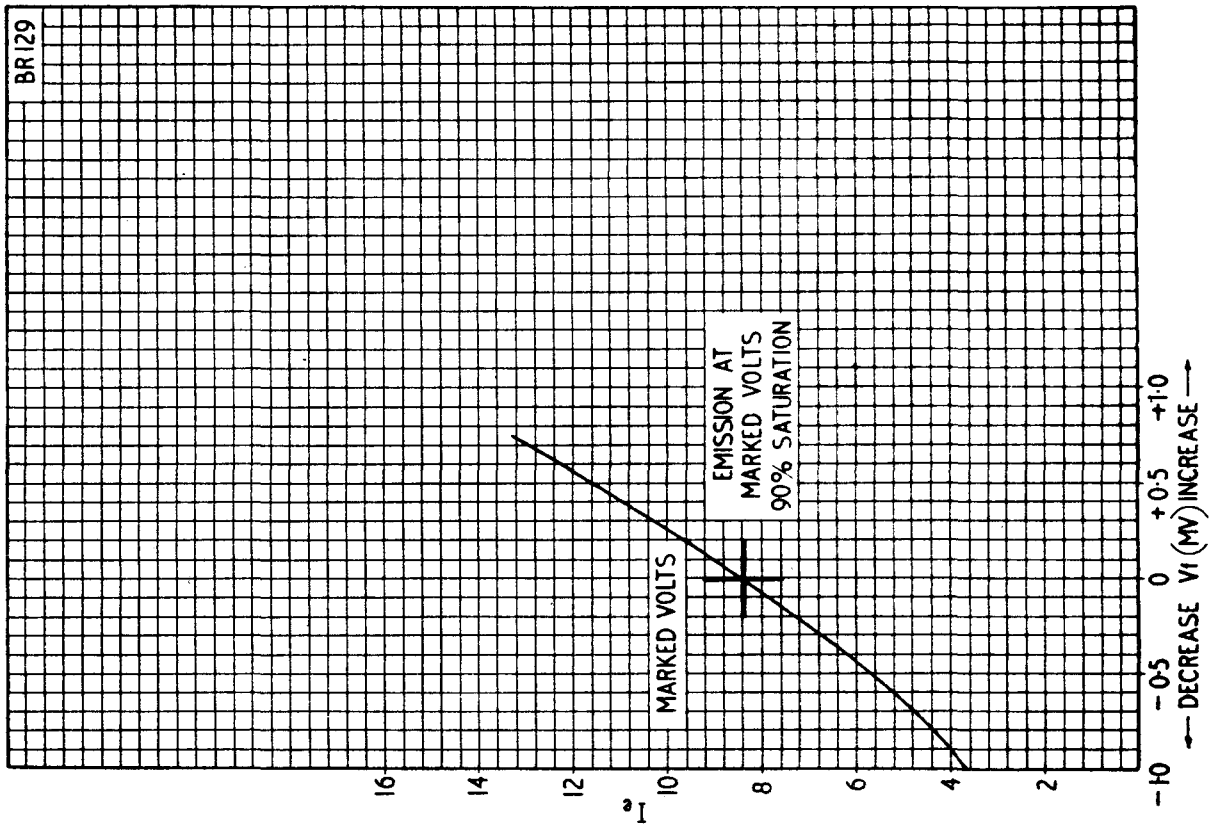

PRINTED IN ENGLAND