BR/BW1165 Series

R.F. POWER TRIODES

Service Type (BR1165) CV3926

The data should be read in conjunction with the Power Triode Preamble.

ABRIDGED DATA

Three r.f. power triodes intended for a.m., f.m. or television transmitters and for industrial applications. They differ only in anode dissipation and in the method of anode cooling.

Anode cooling:		
BR1165		forced-air
BW1165		water; separate jacket
BW1165J3		water; integral jacket
Anode dissipation:		
BR1165	5.0	kW max
BW1165, BW1165J3	6.0	kW max
Anode voltage	6.0	kV max
Operating frequency	220	MHz max
Output power:		
class B audio, per valve	6.65	kW
class C telegraphy, f.m. telephony	6.9	kW
class C television, per valve	4.5	kW
class C industrial oscillator	6.5	kW

GENERAL

Electrical

Filament		thoriated tungsten
Filament voltage (see note 1)	12.6	V
Filament current	33	A
Peak usable cathode current	8.5	A
Amplification factor (V_a = 4.0kV, I_a = 1.0A)	32	
Mutual conductance (V_a = 4.0kV, I_a = 1.0A)	17	mA/V
Inter-electrode capacitances:		
grid to anode	11	pF
grid to filament	16	pF
anode to filament	0.3	pF

© 1976 English Electric Valve Company Limited

May 1976

Supersedes January 1970 Issue

Mechanical

Overall dimensions	see outline drawings
Net weight:	
BR1165	10.1 pounds (4.6kg) approx
BW1165	1 pound (0.45kg) approx
BW1165J3	1.8 pounds (0.7kg) approx
Mounting position:	
BR1165, BW1165J3	vertical, either way up
BW1165	vertical, filament pins up

Accessories

Filament connectors	MA146A
Centre-tap dissipating connector	MA146A
Grid connector (above 30MHz)	MA147A
Grid connector (below 30MHz)	MA148A
Insulating pedestal for BR1165	MA149A
Water jacket for BW1165	BW4088A
Sealing ring (supplied with BW1165)	MA314

COOLING

Anode

The air cooling requirements for BR1165 are given in the following table. The air flow should be delivered immediately before and during the application of any voltages.

Anode dissipation (kW)	Height above sea level (m)	Inlet temperature (max) (°C)	Rate of flow of air (min) (m^3/min)	Pressure drop (mm water)
1.0	0	35	3.0	8.0
1.0	0	45	3.1	8.0
1.0	1500	35	3.7	9.0
1.0	3000	25	4.1	10
3.0	0	35	5.2	23
3.0	0	45	6.1	29
3.0	1500	35	6.2	26
3.0	3000	25	6.6	26
5.0	0	35	9.2	68
5.0	0	45	10.7	90
5.0	1500	35	11.2	81
5.0	3000	25	11.6	79

The BW1165 anode must be fitted into a water jacket for cooling, the recommended jacket being type BW4088A. The water cooling requirements are given in the following table.

Anode dissipation (kW)	Inlet temperature (°C)	Rate of flow of water l./min	gal/min	Pressure drop across jacket (atm)
1.0	20	2.5	0.55	0.08
1.0	50	3.0	0.66	0.10
2.0	20	2.5	0.55	0.08
2.0	50	5.0	1.10	0.30
4.0	20	4.0	0.88	0.18
4.0	50	9.0	1.98	0.90
6.0	20	6.0	1.32	0.4
6.0	50	14	3.08	2.5

The BW1165J3 has an integral water jacket. Minimum water cooling requirements are shown on page 16; higher rates of flow should be used where possible. A thermal fuse may be fitted (see page 20).

Filament, Grid and Anode Seals

It may be necessary to direct a flow of air on to the filament and grid seals in order to maintain their temperatures within the following limits.

Temperature of filament seals	210	°C max
Temperature of grid and anode seals	180	°C max

Filament Centre-tap Pin

A heat dissipating connector such as MA146A must be used on the filament centre-tap pin.

AUDIO FREQUENCY POWER AMPLIFIER OR MODULATOR (Class B)

MAXIMUM RATINGS (Absolute values)

Anode voltage	6.0	kV max
Anode current	1.5	A max
Anode input power	9.0	kW max
Anode dissipation	6.0	kW max
Grid dissipation	120	W max
Grid circuit resistance	15	kΩ max
Cathode current (peak)	5.7	A max

TYPICAL OPERATING CONDITIONS (Class B, 2 valves)

Anode voltage	3.0	3.5	4.0	kV
Grid voltage	−90	−100	−112	V
Peak a.f. grid drive voltage (per valve)	285	310	318	V
Anode current (zero signal)	2 x 65	2 x 75	2 x 100	mA
Anode current (maximum signal)	2 x 0.80	2 x 0.95	2 x 0.94	A
Grid current (maximum signal)	2 x 0.20	2 x 0.18	2 x 0.19	A
Effective load (anode to anode)	4.4	4.2	4.9	kΩ
Nominal driving power (maximum signal)	2 x 52	2 x 50	2 x 54	W
Anode dissipation	2 x 0.75	2 x 1.0	2 x 1.1	kW
Output power (maximum signal)	3.3	4.6	5.3	kW
Efficiency	69	70	71	%
Total distortion	3.3	2.9	2.6	%
Anode voltage	4.5	5.0	6.0	kV
Grid voltage	−125	−138	−165	V
Peak a.f. grid drive voltage (per valve)	327	330	455	V
Anode current (zero signal)	2 x 100	2 x 110	2 x 125	mA
Anode current (maximum signal)	2 x 0.92	2 x 0.91	2 x 1.50	A
Grid current (maximum signal)	2 x 0.19	2 x 0.14	2 x 0.28	A
Effective load (anode to anode)	6.1	6.4	4.9	kΩ
Nominal driving power (maximum signal)	2 x 27	2 x 42	2 x 115	W
Anode dissipation	2 x 1.15	2 x 1.25	2 x 2.35	kW
Output power (maximum signal)	6.0	6.6	13.3	kW
Efficiency	72	73	74	%
Total distortion	3.7	3.3	4.3	%

RADIO FREQUENCY POWER AMPLIFIER

(Class B Telephony, carrier conditions per valve for use with a maximum modulation factor of 1.0)

MAXIMUM RATINGS (Absolute values)

Anode voltage	6.0	kV max
Anode current	1.1	A max
Anode input power	6.6	kW max
Anode dissipation	5.0	kW max
Grid dissipation	120	W max
Cathode current (peak)	4.6	A max

TYPICAL OPERATING CONDITIONS (frequency 75MHz)

Anode voltage	5.0	6.0	kV
Grid voltage	−145	−180	V
Peak r.f. grid drive voltage	225	250	V
Anode current	900	990	mA
Grid current (100% modulation)	320	300	mA
Driving power (100% modulation)	160	170	W
Anode dissipation	3.0	4.0	kW
Output power	1.45	1.90	kW
Efficiency	32	32	%

RADIO FREQUENCY POWER AMPLIFIER

(Class C Telegraphy, key down conditions, or F.M. Telephony, per valve)

MAXIMUM RATINGS (Absolute values)

Anode voltage	6.0	kV max
Anode current	1.5	A max
Anode input power	9.0	kW max
Anode dissipation	5.0	kW max
Grid voltage (negative value)	1.0	kV max
Grid current	0.35	A max
Grid dissipation	120	W max
Cathode current (peak)	8.5	A max

TYPICAL OPERATING CONDITIONS
(Grounded Cathode)

Frequency	75	75	75	110	MHz
Anode voltage	4.0	5.0	6.0	5.0	kV
Grid voltage	−200	−300	−400	−300	V
Peak r.f. grid drive voltage	500	640	740	640	V
Anode current	1.37	1.50	1.50	1.25	A
Grid current	350	330	310	300	mA
Nominal driving power	190	240	275	250	W
Anode dissipation	1.5	1.9	2.1	1.45	kW
Output power	4.0	5.6	6.9	4.8	kW
Efficiency	73	75	76.5	70	%

TYPICAL OPERATING CONDITIONS
(Grounded Grid, 2 valves)

Frequency	75	110	110	220	MHz
Anode voltage	6.0	4.0	5.0	4.0	kV
Filament-grid voltage	400	200	300	200	V
Peak r.f. drive voltage, filament to filament	1480	1000	1280	900	V
Anode current	2 x 1.5	2 x 1.37	2 x 1.5	2 x 1.25	A
Grid current	2 x 310	2 x 350	2 x 330	2 x 220	mA
Nominal driving power	2 x 1190	2 x 705	2 x 965	2 x 395	W
Anode dissipation	2 x 2.1	2 x 1.7	2 x 2.2	2 x 2.5	kW
Output power (see note 2)	15.6	8.6	12	5.6	kW
Efficiency	77	69	71	50	%

ANODE MODULATED R.F. POWER AMPLIFIER

(Class C Telephony, carrier conditions per valve for use with a maximum modulation factor of 1.0)

MAXIMUM RATINGS (Absolute values)

Anode voltage	5.0	kV max
Anode current	1.3	A max
Anode input power	6.5	kW max
Anode dissipation	3.4	kW max
Grid voltage (negative value)	1.0	kV max
Grid current	0.35	A max
Grid dissipation	120	W max
Cathode current (peak)	5.7	A max

TYPICAL OPERATING CONDITIONS

Frequency	75	75	75	MHz
Anode voltage	3.0	3.5	4.0	kV
Grid voltage	−250	−300	−300	V
Peak r.f. grid drive voltage	510	600	600	V
Anode current	1.0	1.2	1.2	A
Grid current	0.3	0.3	0.3	A
Nominal driving power	170	205	205	W
Anode dissipation	0.8	1.2	1.3	kW
Output power	2.2	3.0	3.5	kW
Efficiency	73	71.5	73	%

Frequency	75	75	110	MHz
Anode voltage	4.5	5.0	4.0	kV
Grid voltage	−350	−400	−350	V
Peak r.f. grid drive voltage	650	690	600	V
Anode current	1.2	1.2	0.93	A
Grid current	0.3	0.3	0.24	A
Nominal driving power	230	205	130	W
Anode dissipation	1.3	1.3	0.92	kW
Output power	4.1	4.7	2.8	kW
Efficiency	76	78	75	%

CLASS C TELEVISION SERVICE, GRID-MODULATED

MAXIMUM RATINGS (Absolute values)

	Up to 75MHz	Up to 220MHz	
Anode voltage	5.0	4.0	kV max
Anode current	1.9	1.6	A max
Anode input power	9.5	6.5	kW max
Anode dissipation (sync. level)	5.0	4.0	kW max
Grid voltage (negative value) (sync. level)	1.0	1.0	kV max
Grid current	0.25	0.25	A max
Grid dissipation (sync. level)	120	120	W max
Cathode current (peak)	10	10	A max

TYPICAL OPERATING CONDITIONS

(Negative modulation, positive synchronisation) (2 valves)

Frequency	48 to 75	170 to 220	MHz
Anode voltage	5.0	4.0	kV
Grid voltage:			
peak sync.	−200	−150	V
black level	−300	−225	V
white level	−550	−500	V
Peak r.f. grid to grid voltage *(sync. level)*	1.0	1.0	kV
Anode current:			
peak sync.	2 x 1.9	2 x 1.6	A
black level	2 x 1.3	2 x 1.3	A
Grid current:			
peak sync.	2 x 0.250	2 x 0.20	A
black level	2 x 0.175	2 x 0.11	A
Nominal driving power (sync. level)	2 x 250	2 x 400	W
Output power (sync. level)	9.0	6.0	kW
Power into load (sync. level) (see note 3)	6.3	4.2	kW
Bandwidth (see note 4):			
to −3db points	8.00	10	MHz
to −1.5db points	5.25	6.5	MHz

TYPICAL OPERATING CONDITIONS

(Positive modulation, negative synchronisation) (2 valves)

Frequency	48 to 75	MHz
Anode voltage	5.0	kV
Grid voltage:		
white level	−200	V
black level	−460	V
peak sync.	−580	V
Peak r.f. grid to grid voltage (white level)	1.0	kV
Anode current:		
white level	2 x 1.9	A
black level	2 x 0.4	A
Grid current:		
white level	2 x 250	mA
black level	0	mA
Nominal driving power (white level)	2 x 250	W
Output power (white level)	9.0	kW
Power into load (white level) (see note 3)	6.3	kW
Bandwidth (see note 4):		
to −3db points	8.0	MHz
to −1.5db points	5.25	MHz

RADIO FREQUENCY OSCILLATOR FOR INDUSTRIAL SERVICE

(Class C, anode supply from unfiltered two-phase half-wave rectifier)

MAXIMUM RATINGS (Absolute values)

Anode voltage	5.4	kV max
Anode current	1.35	A max
Anode input power	9.0	kW max
Anode dissipation	5.0	kW max
Grid voltage (negative value)	900	V max
Grid current	0.31	A max
Grid dissipation	120	W max

TYPICAL OPERATING CONDITIONS

Output voltage (r.m.s.) from transformer	5.1	6.0	kV
Anode voltage	4.6	5.4	kV
Anode current	1.15	1.35	A
Grid current	0.27	0.31	A
Anode dissipation	1.84	2.3	kW
Grid resistor	1.1	1.3	kΩ
Nominal driving power	160	210	W
Output power	4.5	6.5	kW
Efficiency	70	72	%

RADIO FREQUENCY OSCILLATOR FOR INDUSTRIAL SERVICE

(Class C, anode supply unrectified a.c.)

MAXIMUM RATINGS (Absolute values)

Output voltage (r.m.s.) from transformer	6.8	kV max
Anode current	0.8	A max
Anode input power	9.0	kW max
Anode dissipation	5.0	kW max
Grid voltage (negative value)	640	V max
Grid current	190	mA max
Grid dissipation	120	W max
Operating frequency	75	MHz max

TYPICAL OPERATING CONDITIONS

Output voltage (r.m.s.) from transformer	5.9	6.8	kV
Grid voltage	−173	−200	V
from grid resistor	1050	1050	Ω
Anode current	0.7	0.8	A
Grid current (approx)	165	190	mA
Anode dissipation	1.24	1.5	kW
Output power	3.36	4.55	kW
Efficiency	73	75	%

NOTES

1. The valve must be operated at the stated filament voltage. Fluctuation in filament voltage must not exceed +5% or −10%. The centre-tap pin may be used for the anode current return but must not be used for the filament current supply. At frequencies above 30MHz, all three filament pins should be interconnected with suitable capacitors.
2. This includes the power transferred from the drive circuit.
3. Assuming circuit transfer efficiency of 70%.
4. For a bandwidth based on one inductor-capacitor circuit.

TYPICAL ANODE CHARACTERISTICS

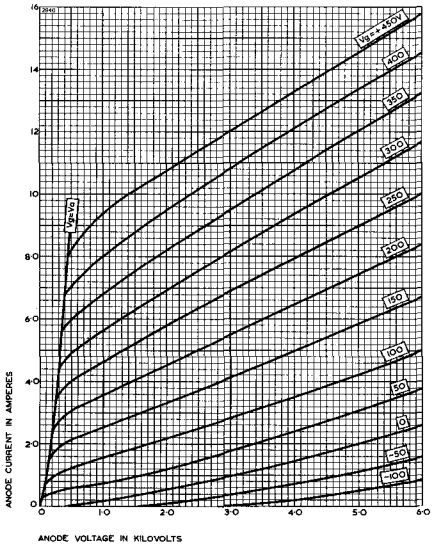

TYPICAL GRID CHARACTERISTICS

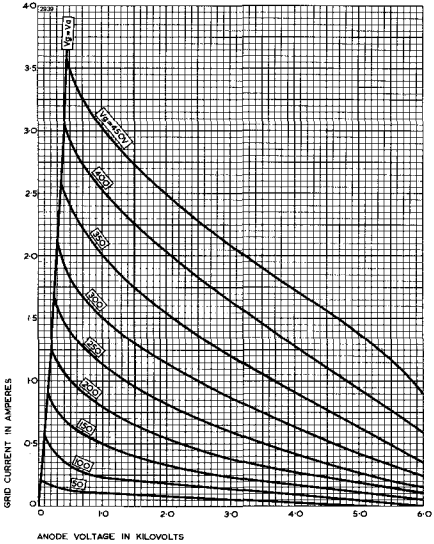

TYPICAL ANODE CURRENT – GRID VOLTAGE CHARACTERISTICS

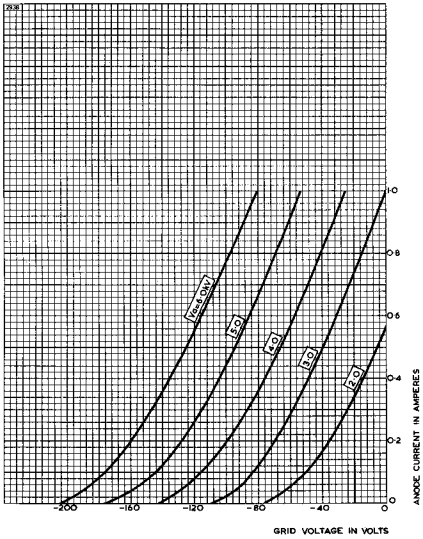

TYPICAL STRAPPED CHARACTERISTICS

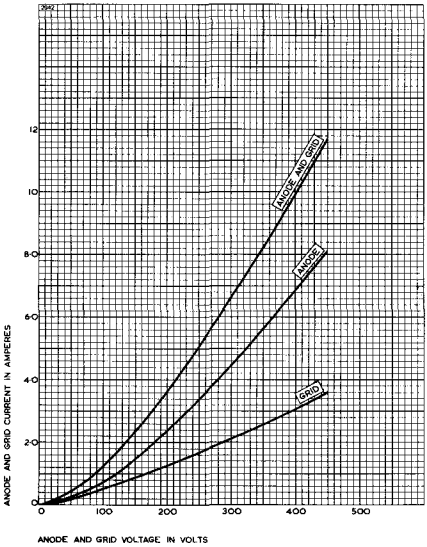

TYPICAL CONSTANT CURRENT CHARACTERISTICS

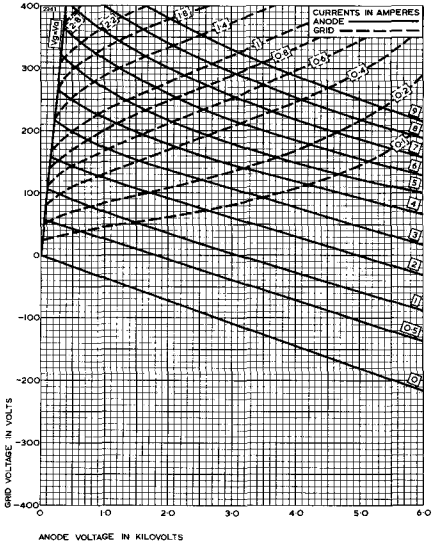

MINIMUM WATER COOLING REQUIREMENTS FOR BW1165J3
Higher rates of flow should be used where possible.

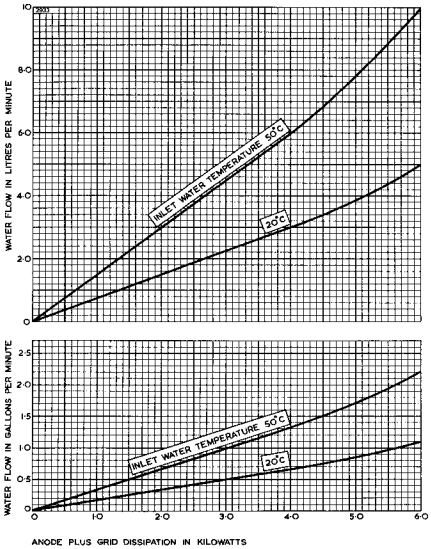

OUTLINE FOR BR1165 (All dimensions without limits are nominal)

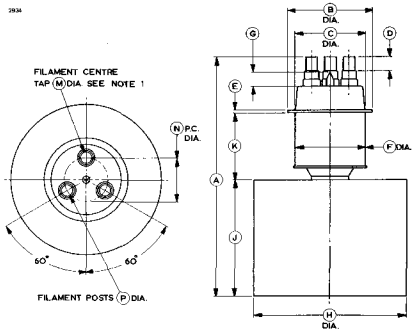

Ref	Millimetres	Inches
A	195.0 max	7.677 max
B	70.00 ± 0.50	2.756 ± 0.020
C	59.00 max	2.323 max
D	12.00 min	0.472 min
E	2.50	0.098
F	64.00 max	2.520 max
G	20.00 max	0.787 max
H	122.3 ± 0.5	4.815 ± 0.020
J	94.00	3.701
K	54.00 ± 0.50	2.126 ± 0.020
M	9.10	0.358
N	35.00 ± 1.00	1.378 ± 0.040
P	9.10	0.358

Inch dimensions have been derived from millimetres.

Note The filament centre tap pin is marked O.

OUTLINE FOR BW1165 (All dimensions without limits are nominal)

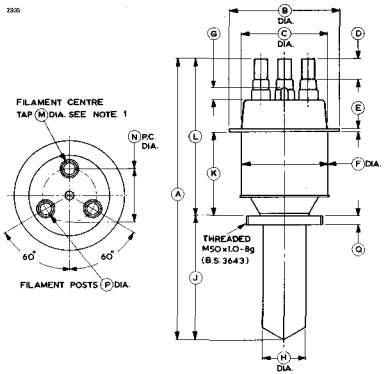

Ref	Millimetres	Inches	Ref	Millimetres	Inches
A	190.0 max	7.480 max	J	83.00 max	3.268 max
B	70.00 ± 0.50	2.756 ± 0.020	K	56.00	2.205
C	59.00 max	2.323 max	L	106.0	4.173
D	12.00 min	0.472 min	M	9.10	0.358
E	2.50	0.098	N	35.00 ± 1.00	1.378 ± 0.040
F	64.00 max	2.520 max	P	9.10	0.358
G	20.00 max	0.787 max	Q	6.25	0.246
H	30.00 max	1.181 max			

Inch dimensions have been derived from millimetres.

Note The filament centre tap pin is marked O.

OUTLINE FOR BW1165J3 (All dimensions without limits are nominal)

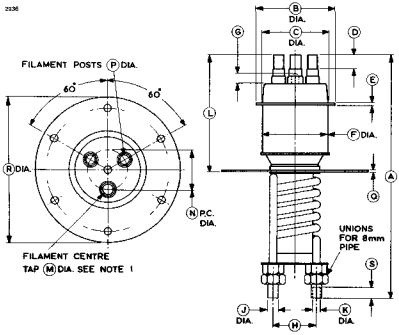

Ref	Millimetres	Inches	Ref	Millimetres	Inches
A	218.0 max	8.583 max	K	8.20	0.323
B	70.00 ± 0.50	2.756 ± 0.020	L	105.0	4.134
C	59.00 max	2.323 max	M	9.10	0.358
D	12.00 min	0.472 min	N	35.00 ± 1.00	1.378 ± 0.040
E	2.50	0.098	P	9.10	0.358
F	64.00 max	2.520 max	Q	2.00	0.079
G	20.00 max	0.787 max	R	130.0 ± 0.5	5.118 ± 0.020
H	39.00	1.535	S	10.0	0.394
J	10.00	0.394			

Inch dimensions have been derived from millimetres.

View of BW1165J3 from below

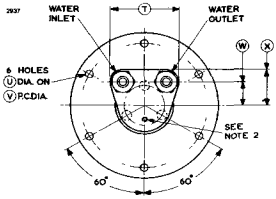

Ref	Millimetres	Inches
T	61.00 max	2.402 max
U	6.50	0.256
V	110.0 ± 1.00	4.331 ± 0.040
W	21.00	0.827
X	32.00	1.260

Inch dimensions have been derived from millimetres.

Outline Notes for BW1165J3

1. The filament centre tap pin is marked O.
2. Hole threaded 4B.A. to accept thermal fuse.

English Electric Valve Company Limited
Chelmsford, Essex, England
Printed in England