BR/BW1162 Series

R.F. POWER TRIODES

Service Type (BR1162) CV5239

The data should be read in conjunction with the Power Triode Preamble.

ABRIDGED DATA

Three r.f. power triodes intended for transmitter and industrial applications. They differ only in the method of anode cooling.

Anode cooling:		
BR1162	forced-air	
BW1162	water; separate jacket	
BW1162J3	water; integral jacket	
Anode dissipation	6.0	kW max
Anode voltage	7.2	kV max
Operating frequency:		
class C telegraphy	30	MHz max
class C industrial oscillator	85	MHz max
Output power:		
class B audio, per tube	10	kW
class C telegraphy	9.5	kW
class C industrial oscillator	8.6	kW

GENERAL

Electrical

Filament	thoriated tungsten	
Filament voltage (see note 1)	12.6	V
Filament current	33	A
Peak usable cathode current	14	A
Amplification factor (V_a = 6.0 kV, I_a = 1.0 A)	32	
Mutual conductance (V_a = 6.0 kV, I_a = 1.0 A)	15	mA/V
Inter-electrode capacitances:		
grid to anode	11	pF
grid to filament	16	pF
anode to filament	0.3	pF

© 1978 English Electric Valve Company Limited

July 1978

Supersedes January 1970 Issue

Mechanical

Overall dimensions . . . . . see outline drawings
Net weight:
BR1162 . . . . . 10.1 pounds (4.6 kg) approx
BW1162 . . . . . 1 pound (0.45 kg) approx
BW1162J3 . . . . . 1.8 pounds (0.7 kg) approx
Mounting position:
BR1162, BW1162J3 . . . . . vertical, either way up
BW1162 . . . . . vertical, filament pins up

Accessories

Filament connectors (2 per tube) MA146A
Centre-tap heat dissipating connector, must be used MA146B
Grid connector MA147A
Insulating pedestal for BR1162 . . . . . MA149A
Water jacket for BW1162 . . . . . BW4088A
Sealing ring (supplied with BW1162) MA314

COOLING

Anode

The air cooling requirements for BR1162 are given in the following table. The air flow should be delivered immediately before and during the application of any voltages.

Anode dissipation (kW)	Height above sea level (m)	Inlet temperature (max) (°C)	Rate of flow of air (min) (m^3/min)	Pressure drop (mm water)
2.0	0	35	4.8	20
2.0	0	45	5.7	25
2.0	1500	35	5.7	23
2.0	3000	25	6.1	23
3.5	0	35	6.2	32
3.5	0	45	7.3	42
3.5	1500	35	7.3	36
3.5	3000	25	7.8	36
6.0	0	35	9.2	68
6.0	0	45	10.7	91
6.0	1500	35	11.2	81
6.0	3000	25	11.7	80

The BW1162 anode must be fitted into a water jacket for cooling, the recommended jacket being type BW4088A. The water cooling requirements are given in the following table.

Anode dissipation (kW)	Inlet temperature (°C)	Rate of flow of water		Pressure drop across jacket (atm)
		l./min	gal/min	
1.0	20	2.5	0.55	0.08
1.0	50	3.0	0.66	0.10
2.0	20	2.5	0.55	0.08
2.0	50	5.0	1.10	0.3
4.0	20	4.0	0.88	0.18
4.0	50	9.0	1.98	0.90
6.0	20	6.0	1.32	0.4
6.0	50	14	3.08	2.5

The BW1162J3 has an integral water jacket. Minimum water cooling requirements are shown on page 11; higher rates of flow should be used where possible. A thermal fuse may be fitted (see page 15).

Filament, Grid and Anode Seals

It may be necessary to direct a flow of air on to the filament and grid seals in order to maintain their temperatures within the following limits.

Temperature of filament seals . . . . . 210 °C max
Temperature of grid and anode seals . . . . . 180 °C max

Filament Centre-tap Pin

A heat dissipating connector such as MA146B must be used on the filament centre-tap pin.

AUDIO FREQUENCY POWER AMPLIFIER OR MODULATOR (Class B)

MAXIMUM RATINGS (Absolute values)

Anode voltage	7.2	kV max
Anode current	2.2	A max
Anode input power	14	kW max
Anode dissipation	6.0	kW max
Grid dissipation	250	W max
Grid circuit resistance	15	kΩ max
Cathode current (peak)	10	A max

OPERATING CONDITIONS (Class B, 2 tubes)

Anode voltage	4.0	5.0	5.0	7.0	kV
Grid voltage	−135	−165	−165	−250	V
Peak a.f. grid drive voltage (per tube)	465	365	440	650	V
Anode current (zero signal)	2 x 0.10	2 x 0.15	2 x 0.15	2 x 0.20	A
Anode current (maximum signal)	2 x 1.25	2 x 1.10	2 x 1.25	2 x 2.00	A
Grid current (maximum signal)	2 x 0.36	2 x 0.22	2 x 0.33	2 x 0.53	A
Effective load (anode to anode)	3.8	5.5	4.8	4.15	kΩ
Nominal driving power (maximum signal)	2 x 135	2 x 70	2 x 130	2 x 310	W
Anode dissipation	2 x 1.45	2 x 1.50	2 x 1.70	2 x 4.00	kW
Output power (maximum signal)	7.1	8.0	9.0	20	kW
Efficiency	71	72.5	72.5	71.5	%

ANODE MODULATED R.F. POWER AMPLIFIER

(Class C Telephony, carrier conditions per tube for use with a maximum modulation factor of 1.0)

MAXIMUM RATINGS (Absolute values)

Anode voltage	5.5	kV max
Anode current	1.8	A max
Anode dissipation	4.0	kW max
Grid voltage (negative value)	1.25	kV max
Grid current	0.6	A max
Grid dissipation	250	W max
Cathode current (peak)	12	A max
Frequency for above ratings	30	MHz max

OPERATING CONDITIONS (frequency 30 MHz)

Anode voltage	4.0	5.0	5.0	kV
Grid voltage	−300	−400	−400	V
Peak r.f. grid drive voltage	680	730	800	V
Anode current	1.6	1.4	1.6	A
Grid current	0.6	0.5	0.5	A
Nominal driving power	367	328	432	W
Anode dissipation	1.4	1.4	1.6	kW
Output power	5.0	5.6	6.4	kW
Efficiency	78	80	80	%

RADIO FREQUENCY POWER AMPLIFIER

(Class C Telegraphy, key down conditions, or F.M. Telephony, one tube)

MAXIMUM RATINGS (Absolute values)

Anode voltage	7.2	kV max
Anode current	2.2	A max
Anode input power	14	kW max
Anode dissipation	6.0	kW max
Grid voltage (negative value)	1250	V max
Grid current	0.6	A max
Grid dissipation	250	W max
Cathode current (peak)	14	A max
Frequency for above ratings	30	MHz max

OPERATING CONDITIONS (frequency 30 MHz)

Anode voltage	5.0	6.0	6.5	kV
Grid voltage	−300	−400	−450	V
Peak r.f. grid drive voltage	660	780	820	V
Anode current	2.0	2.0	2.0	A
Grid current	0.5	0.5	0.5	A
Nominal driving power	207	350	370	W
Anode dissipation	2.9	3.5	3.5	kW
Output power	7.1	8.5	9.5	kW
Efficiency	71	71	73	%

RADIO FREQUENCY POWER OSCILLATOR

(Class C, anode supply from unfiltered three phase half-wave rectifier)

MAXIMUM RATINGS (Absolute values)

Anode voltage	7.0	kV max
Anode current	1.8	A max
Anode input power	11	kW max
Anode dissipation	6.0	kW max
Grid voltage (negative value)	1250	V max
Grid current (unloaded)	0.7	A max
Grid current (loaded)	0.5	A max
Grid dissipation	250	W max
Grid circuit resistance	10	kΩ max
Cathode current (peak)	11	A max
Operating frequency for full ratings	55	MHz max
Anode voltage for operation at 85 MHz max	6.5	kV max

OPERATING CONDITIONS

Frequency	55	85	85	MHz
Output voltage (r.m.s.) from transformer	5.55	5.13	4.27	kV
Anode voltage	6.5	6.0	5.0	kV
Anode current	1.7	1.5	1.7	A
Grid current (unloaded)	0.7	0.7	0.7	A
Grid current (loaded)	0.5	0.4	0.45	A
Anode dissipation	2.4	2.5	2.4	kW
Anode load resistance	2.0	2.3	1.6	kΩ
Grid resistor	0.9	1.0	0.85	kΩ
Feedback ratio (see note 2)	0.15	0.15	0.19	
Nominal drive power	350	300	350	W
Output power	8.6	6.5	6.1	kW
Effective output power to load (see note 3)	7.0	5.5	5.0	kW
Efficiency	78	72	72	%

NOTES

1. The tube must be operated at the stated filament voltage. Fluctuation in filament voltage must not exceed +5% or −10%. The centre-tap pin may be used for the anode current return but must not be used for the filament current supply. At frequencies above 30 MHz, all three filament pins should be interconnected with suitable capacitors.

2. The feedback ratio is defined as $\frac{v_{g\ (pk)}}{v_{a\ (pk)}}$

   where $v_{g\ (pk)}$ = peak r.f. grid voltage in volts
   and $v_{a\ (pk)}$ = peak r.f. anode voltage in volts.

3. Effective output power to load = $\eta_a\ (P_{out} - P_{drive})$

   where η_a = efficiency of anode circuit = 85% (typical value)

   P_{out} = output power of valve to anode circuit

   P_{drive} = drive power fed back to grid circuit.

TYPICAL ANODE CHARACTERISTICS

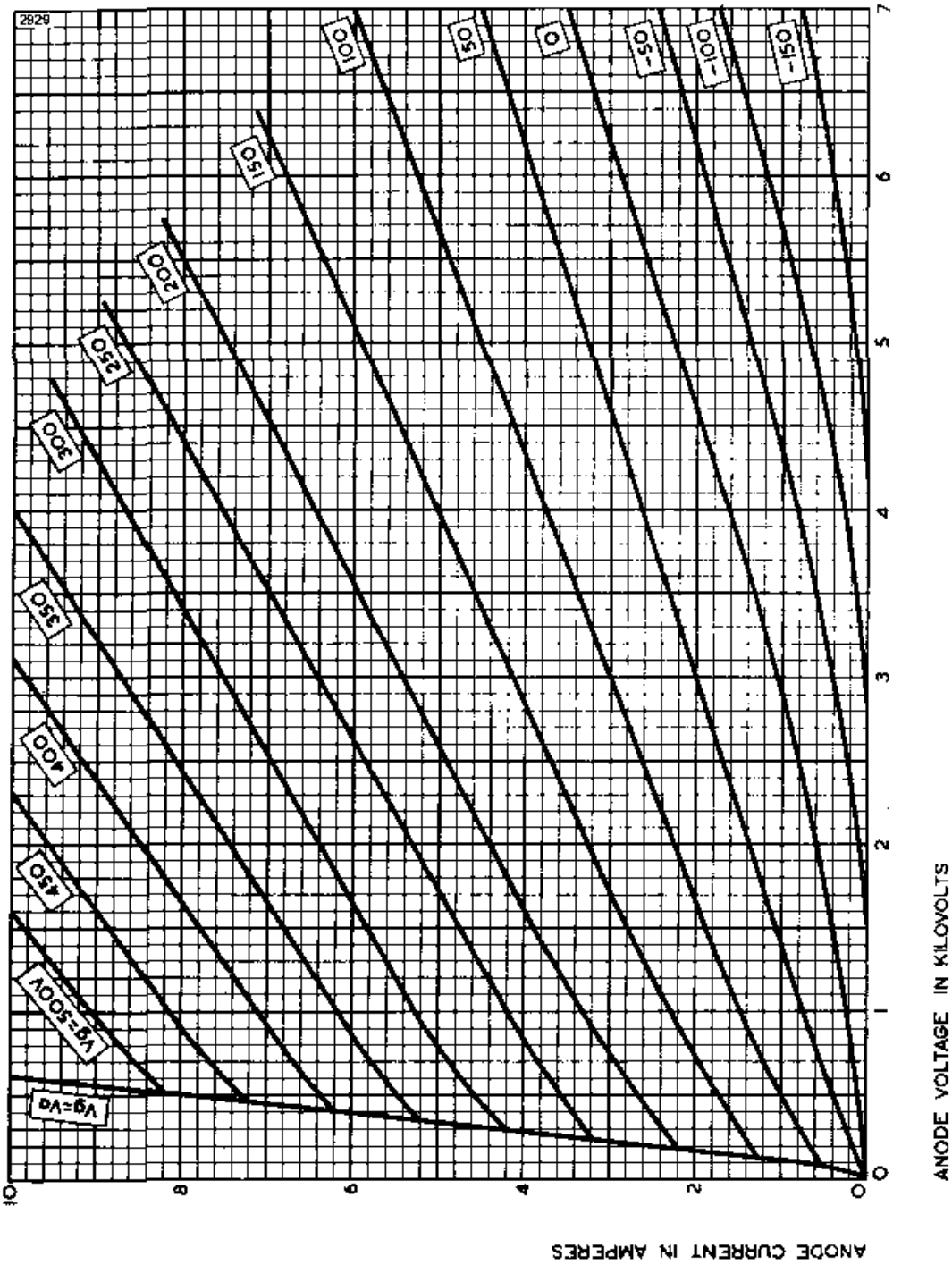

TYPICAL GRID CHARACTERISTICS

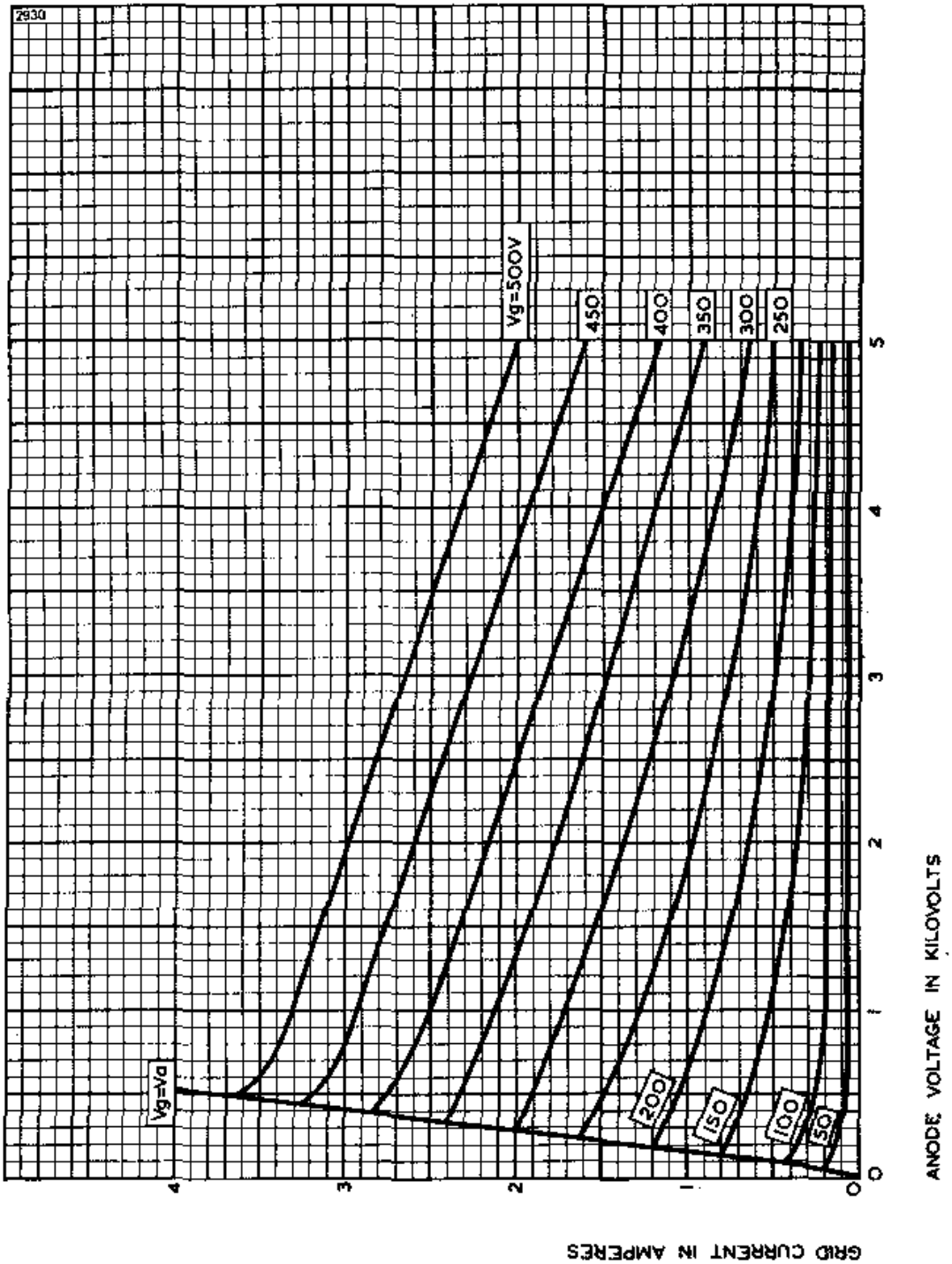

TYPICAL CONSTANT CURRENT CHARACTERISTICS

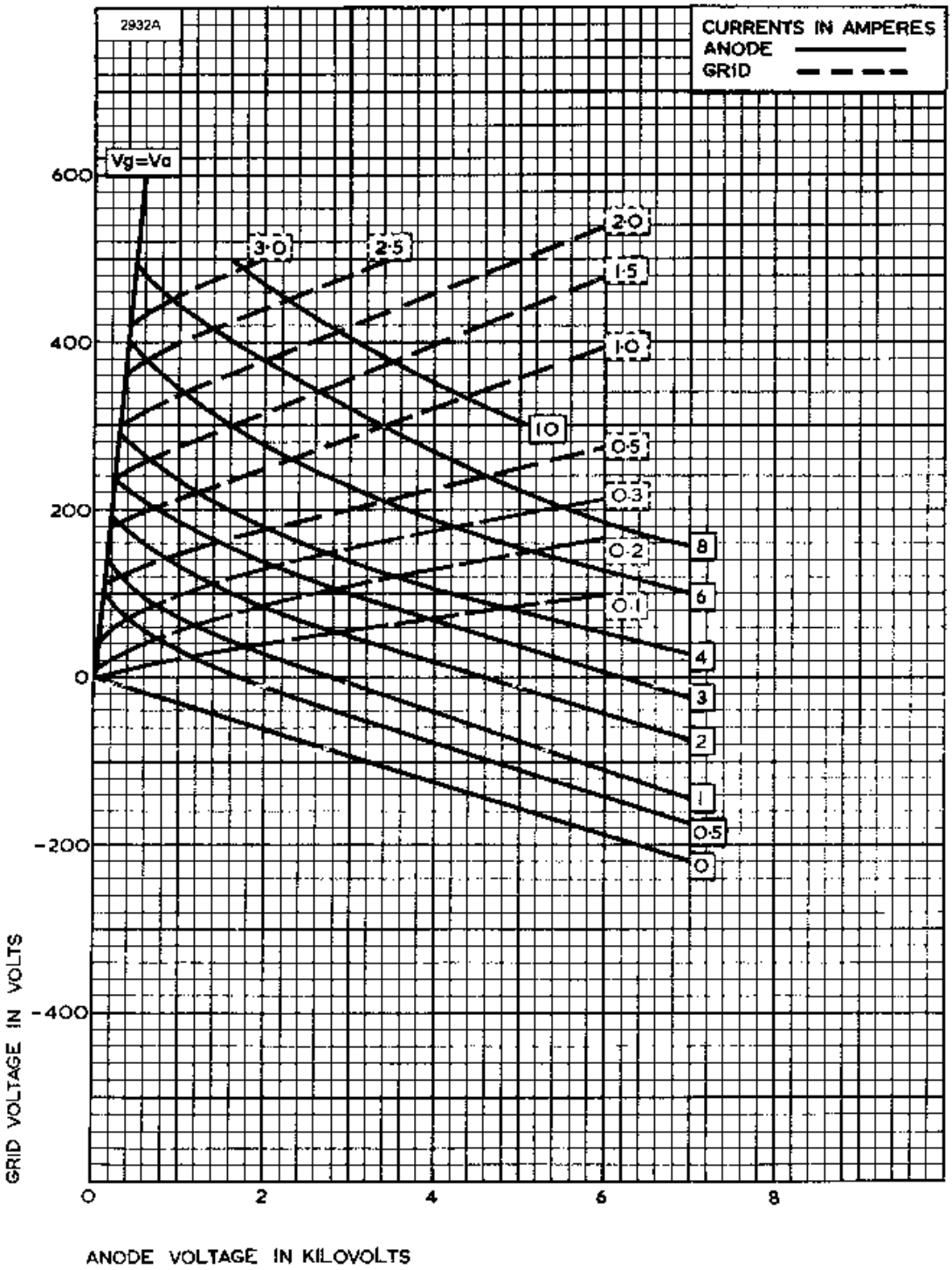

WATER COOLING REQUIREMENTS FOR BW1162J3

Higher rates of flow should be used where possible.

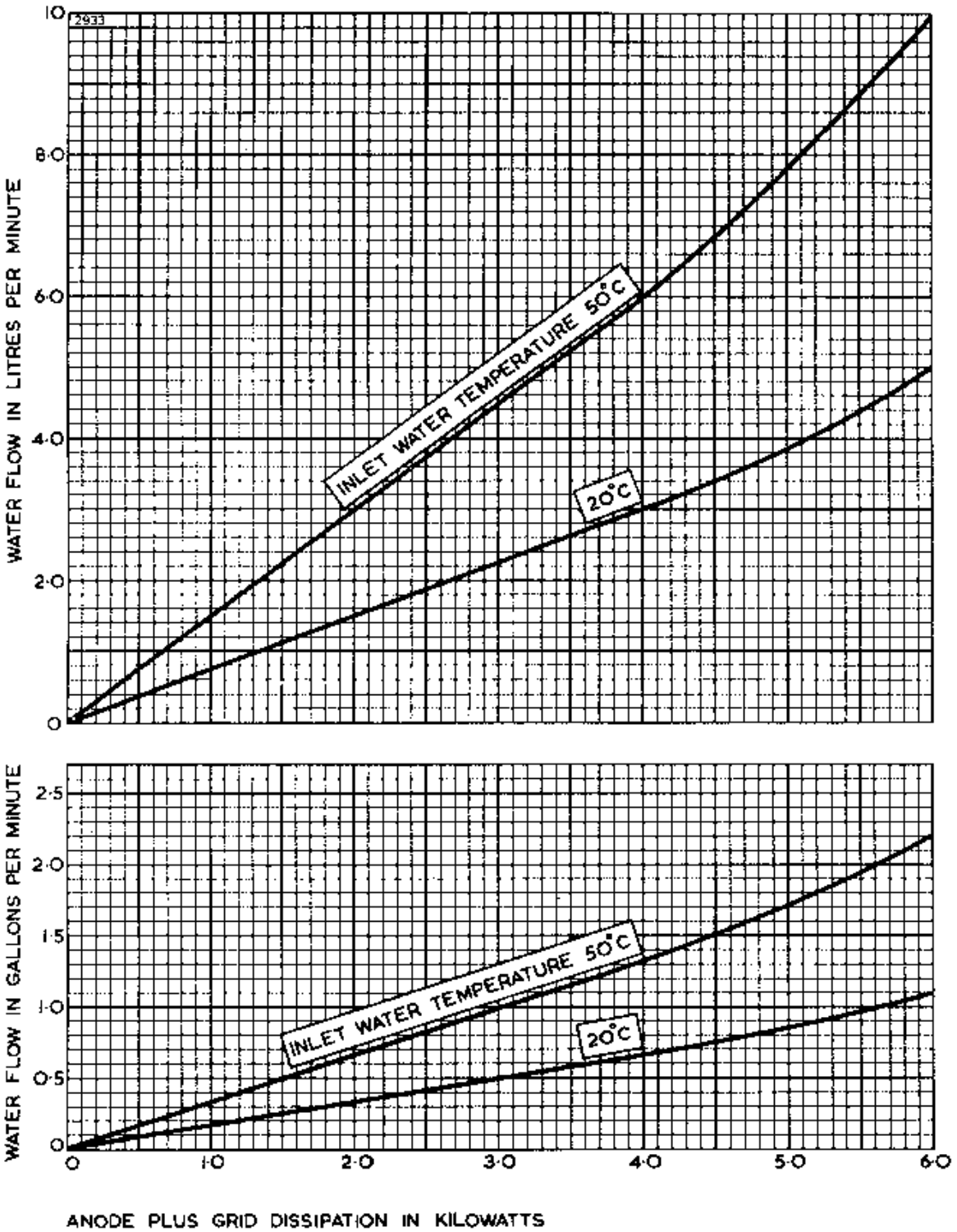

OUTLINE FOR BR1162 (All dimensions without limits are nominal)

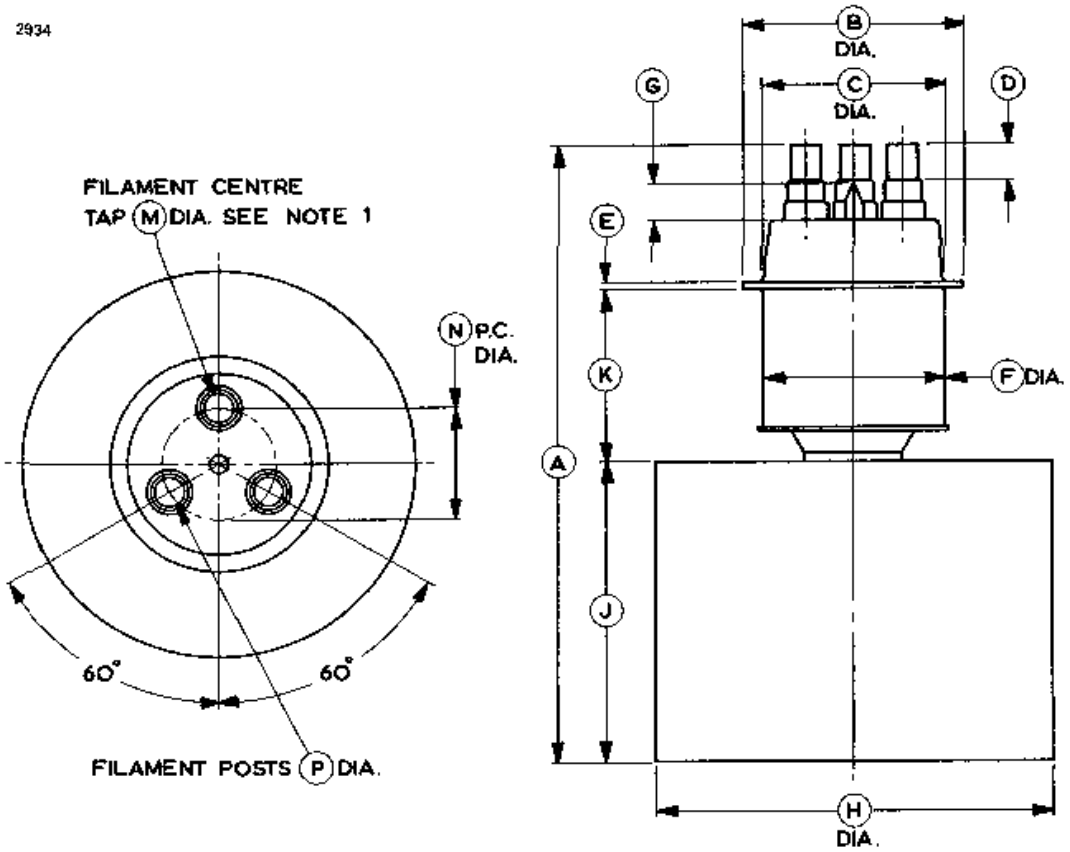

Ref	Millimetres	Inches	Ref	Millimetres	Inches
A	195.0 max	7.677 max	H	122.3 ± 0.5	4.815 ± 0.020
B	70.00 ± 0.50	2.756 ± 0.020	J	94.00	3.701
C	59.00 max	2.323 max	K	54.00 ± 0.50	2.126 ± 0.020
D	12.00 min	0.472 min	M	10.50	0.413
E	2.50	0.098	N	35.00 ± 1.00	1.378 ± 0.040
F	64.00 max	2.520 max	P	9.10	0.358
G	20.00 max	0.787 max			

Inch dimensions have been derived from millimetres.

Note The filament centre tap pin is marked O.

OUTLINE FOR BW1162 (All dimensions without limits are nominal)

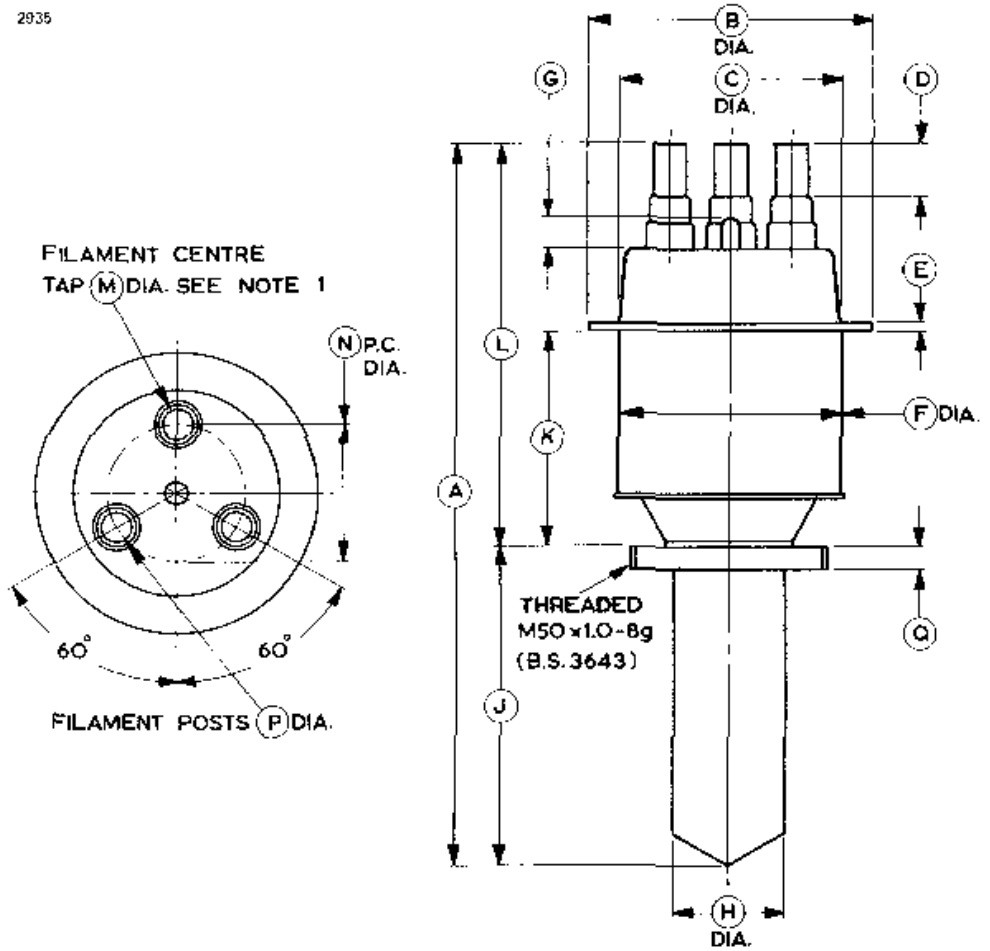

Ref	Millimetres	Inches	Ref	Millimetres	Inches
A	190.0 max	7.480 max	J	83.00 max	3.268 max
B	70.00 ± 0.50	2.756 ± 0.020	K	56.00	2.205
C	59.00 max	2.323 max	L	106.0	4.173
D	12.00 min	0.472 min	M	10.50	0.413
E	2.50	0.098	N	35.00 ± 1.00	1.378 ± 0.040
F	64.00 max	2.520 max	P	9.10	0.358
G	20.00 max	0.787 max	Q	6.25	0.246
H	30.00 max	1.181 max			

Inch dimensions have been derived from millimetres.

Note The filament centre tap pin is marked O.

OUTLINE FOR BW1162J3 (All dimensions without limits are nominal)

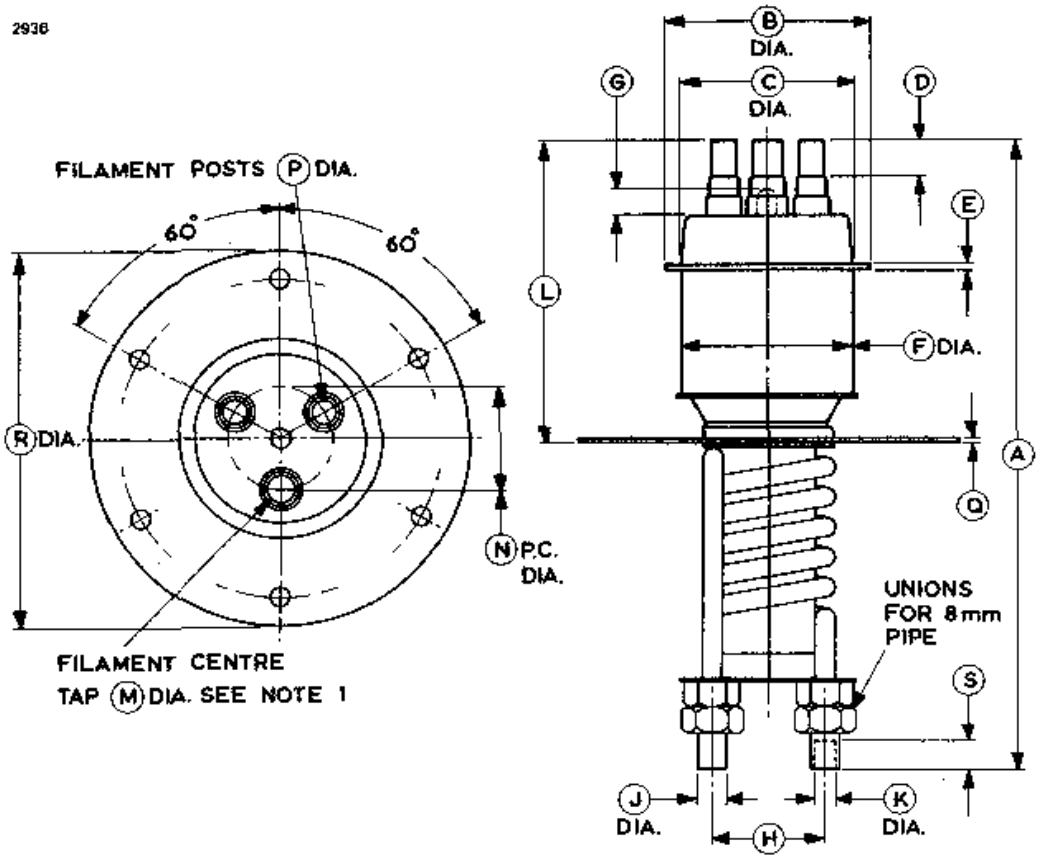

Ref	Millimetres	Inches	Ref	Millimetres	Inches
A	218.0 max	8.583 max	K	8.20	0.323
B	70.00 ± 0.50	2.756 ± 0.020	L	105.0	4.134
C	59.00 max	2.323 max	M	10.50	0.413
D	12.00 min	0.472 min	N	35.00 ± 1.00	1.378 ± 0.040
E	2.50	0.098	P	9.10	0.358
F	64.00 max	2.520 max	Q	2.00	0.079
G	20.00 max	0.787 max	R	130.0 ± 0.5	5.118 ± 0.020
H	39.00	1.535	S	10.0	0.394
J	10.00	0.394			

Inch dimensions have been derived from millimetres.

View of BW1162J3 from below

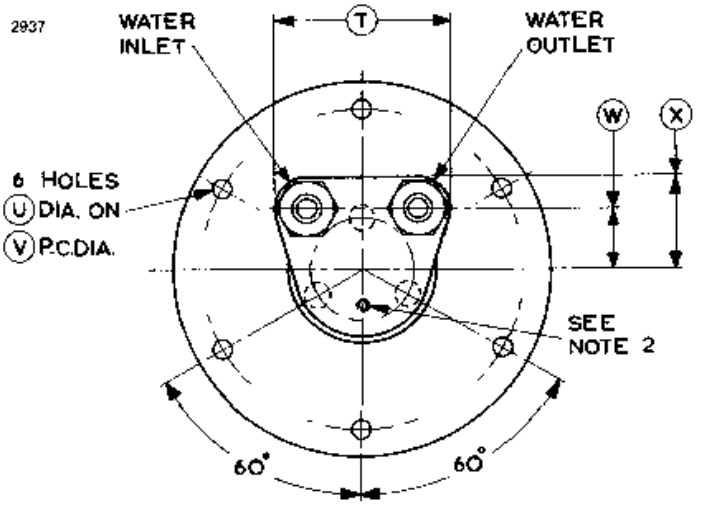

Ref	Millimetres	Inches
T	61.00 max	2.402 max
U	6.50	0.256
V	110.0 ± 1.0	4.331 ± 0.040
W	21.00	0.827
X	32.00	1.260

Inch dimensions have been derived from millimetres.

Outline Notes for BW1162J3

1. The filament centre tap pin is marked O.
2. Hole threaded 4B.A. to accept thermal fuse.

Whilst EEV has taken care to ensure the accuracy of the information contained herein it accepts no responsibility for the consequences of any use thereof and also reserves the right to change the specification of goods without notice. EEV accepts no liability beyond that set out in its standard conditions of sale in respect of infringement of third party patents arising from the use of tubes or other devices in accordance with information contained herein.

Chelmsford, Essex, England

Printed in England