VISIBLE UP TO 150 FEET

JUMBO
TYPES B 7011 (BD 307)
B 7031*

VISIBLE UP TO 75 FEET

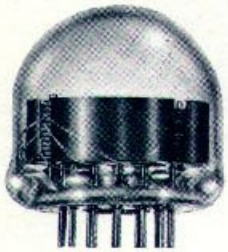

SUPER
TYPES 7153 (BD 206)
B 6033*

VISIBLE UP TO 35 FEET

STANDARD
TYPES 6844 A (BD 302)
B 5031*

VISIBLE UP TO 15 FEET

MINIATURE
TYPES 7009 (BD 2005)
B 4032*

*** ULTRA LONG LIFE NIXIE TUBE TYPES**

NIXIE®

NUMERICAL READOUT TUBES

The NIXIE tube and the Ultra Long Life NIXIE tube are gas-filled cold-cathode, ten-digit ("0" through "9") numerical indicator tubes with a common anode. They are all-electronic in-line readout devices and are ideal for converting electro-mechanical or electronic signals directly to readable characters.

These simple tubes contain stacked elements in the form of metallic numerals. Application of a negative voltage to the selected character with respect to a common anode results in its becoming the cathode of a simple gas discharge diode. Only the selected information is visible in a common viewing area because the visual glow discharge is considerably larger than its metallic source.

These devices are unusually efficient electronic-to-visual converters since all of their electrical energy is converted into a neon glow of relatively narrow optical band width. The eye is a natural filter and distinguishes this glow in high ambient light.

All NIXIE tube types exhibit the following characteristics: (1) All-electronic with a minimum of power required, (2) High-speed rate of change, (3) Simplicity, (4) Wide temperature operating range, (5) Uniform characteristics from tube to tube and number to number, (6) Human-engineered numeral design, (7) Low cost, (8) Small volume for number size, (9) Light weight, (10) Rugged construction, (11) Good readability for number size, (12) And now longest life.

The Ultra Long Life NIXIE tube has the added advantage of greatly increased life for those applications requiring continuous display of one of the ten characters for extended periods of time. Under these stringent conditions a minimum of 20,000 hours life on one numeral can be expected. Where the display is changed sequentially, even as infrequently as every 100 hours, life in excess of 100,000 hours can be expected.

Circular polarized filters may be used in conjunction with all NIXIE tubes where maximum operator efficiency is a critical factor. This type of filter eliminates reflected light and improves contrast and readability.

At the present time there are four distinct sizes of NIXIE tubes: Miniature, Standard, Super, and Jumbo. Each is available in both regular and Ultra Long Life types.

MECHANICAL DATA

	MINIATURE 7009 (BD200S) B 4021 B 4032	STANDARD 6844-A B 5031	SUPER 7153 B 6033	JUMBO B 7011 (Tentative)	JUMBO B7031 SIDE VIEWING (Tentative)
Overall Length	1.175″ max. (cut leads) 2.325″ max. (long leads)	1.380″ max.	1.625″ max.	3.750″ nom.	5.250″ nom.
Seated Height	0.925″ max.	1.125″ max.	1.325″ max.	3.00″ nom.	4.50″ nom.
Bulb Diameter	0.650″ max.	1.080″ max.	1.350″ max.	3.125″ nom.	2.000″ nom.
Envelope Connections	See Fig. 6	See Fig. 5	See Fig. 5	See Fig. 5	See Fig. 4
Height of Numerals	0.305″ nom.	0.610″ nom.	0.808″ nom.	2.250″ nom.	2.000″ nom.
Socket	SK-116 Fig. 9	HSK-106 or HSK-112 Fig. 8	HSK-106 or HSK-112 Fig. 8	SK117 Fig. 10	SK117 Fig. 10
Weight	0.2 oz.	0.4 oz.	0.8 oz.	4.0 oz.	4.0 oz.
Mounting Position	See Note 1	See Note 2	See Note 2	See Note 2	See Note 2
Cathode (s)	Glow Discharge	Glow Discharge	Glow Discharge	Glow Discharge	Glow Discharge

ENVIRONMENTAL DATA

Shock	55 G's	55 G's	55 G's		
Vibration	10 G's 60 Cpc.	10 G's 60 Cps.	10 G's 60 Cps.	Prototype Information not Available	Prototype Information not Available
Temperature	−65°C through +70°C See Note 3	−65°C through +70°C See Note 3	−65°C through +70°C See Note 3		
Altitude	70,000 feet	70,000 feet	70,000 feet		

Note 1 The tube socket is mounted with respect to the viewing position so the intersecting pins 1 & 7 are vertical with pin #7 on top. This orients the numbers in the correct vertical position. They are viewed through the top of the tube.

Note 2 See Fig. 8. The tube socket is oriented with respect to the viewing position so that A—A¹, intersecting the center of Pins 1 and 8 is vertical with Pin 8 on top. This orients the numerals in the correct vertical position. They are viewed through the top of the tube, except type B7031 which is viewed through the side.

Note 3 From +30°C to +70°C, no significant change in cathode current occurs. From +30°C to −65°C an increase in cathode current (up to 50%) may be expected.

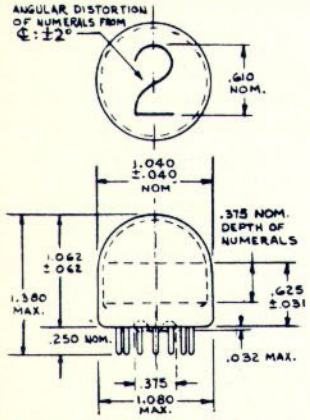

FIG. 1 OUTLINE DRAWING FOR STANDARD TUBES

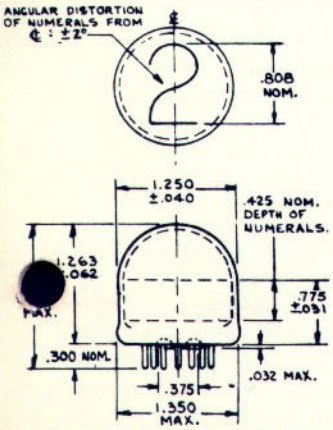

FIG. 2 OUTLINE DRAWING FOR SUPER TUBES

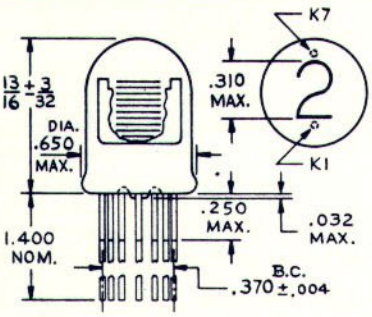

FIG. 3 OUTLINE DRAWING FOR MINIATURE TUBES

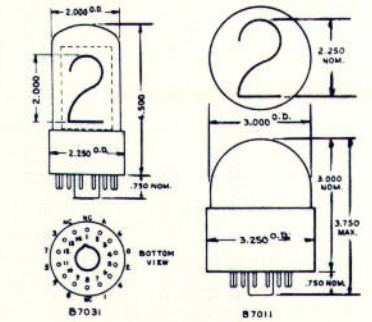

FIG. 4 OUTLINE DRAWING FOR JUMBO TUBES

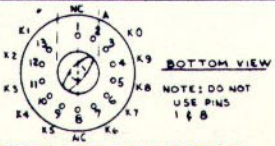

FIG. 5 ENVELOPE CONNECTION DIAGRAM FOR STANDARD SUPER AND JUMBO TUBES

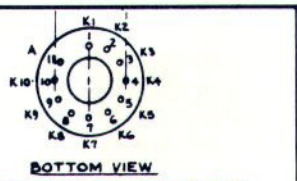

FIG. 6 ENVELOPE CONNECTION DIAGRAM FOR MINIATURE TUBES

1234567890

FIG. 7 HUMAN ENGINEERED NUMBER SHAPES USED ON ALL TUBE TYPES

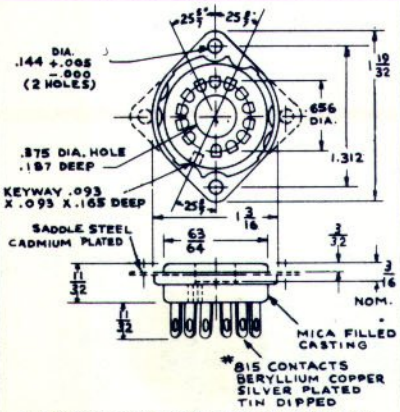

HSK-106 and HSK-112 sockets are physically identical except for the saddle orientation. The HSK-106 saddle is 25-5/7° from the vertical center line. The saddle for the HSK-112 is mounted in line with the vertical center line.

FIG. 8 CONTACT SOCKET ASSEMBLY HSK 106 AND HSK 112 FOR STANDARD AND SUPER TUBES

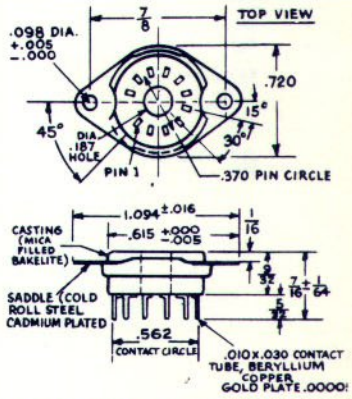

FIG. 9 CONTACT SOCKET ASSEMBLY SK 116 FOR MINIATURE TUBES

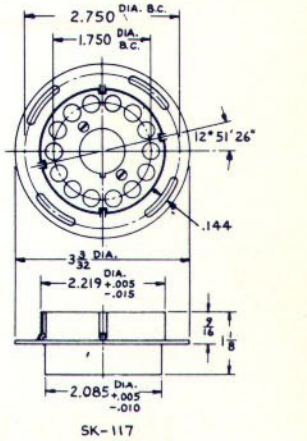

FIG. 10 CONTACT SOCKET ASSEMBLY SK 117 FOR JUMBO TUBES

ELECTRICAL DATA

	MINIATURE			STANDARD		SUPER		JUMBO (Tentative)	
	7009 (BD200S)	B4021	B 4032	6844-A	B 5031	7153	B 6033	B7011	B7031 SIDE VIEWING
1. Absolute Ratings									
Ionization Voltage (Maximum)	170V dc	120V dc	170V dc	170V dc	170V dc	250V dc	250V dc	300V dc	300V dc
Supply Voltage (Minimum) (See Note 2)	170V dc	120V dc	170V dc	170V dc	170V dc	250V dc	250V dc	300V dc	300V dc
Cathode Current									
Peak (See Note 1)	2.0 ma	2.0 ma	1.5 ma	4.0 ma	3.5 ma	5.0 ma	4.5 ma	15.0 ma	16.0 ma
Average	1.0 ma	1.0 ma	0.9 ma	2.0 ma	1.75 ma	2.5 ma	2.25 ma	12.0 ma	13.0 ma
Individual Cathode Wattage (Maximum)	0.20 Watts	0.20 Watts	0.20 Watts	0.4 Watts	0.4 Watts	0.8 Watts	0.8 Watts	1.2 Watts	2.0 Watts
2. Test Conditions (See Basic Circuit)									
Supply Voltage	170V dc	120V dc	170V dc	170V dc	170V dc	250V dc	250V dc	300V dc	300V dc
Series Resistor	68K ohms	20K ohms	15K ohms	15K ohms	10K ohms	43K ohms	43K ohms	12K ohms	12K ohms
Cathode Current:									
Minimum	0.7 ma	0.7 ma	0.6 ma	1.5 ma	1.0 ma	2.0 ma	1.5 ma	9.0 ma	10.0 ma
Maximum	1.2 ma	1.2 ma	1.2 ma	3.0 ma	2.5 ma	3.0 ma	3.0 ma	15.0 ma	16.0 ma
3. Recommended Operating Conditions (DC) (See Note 2) (See Basic Circuit)	E R	E R	E R	E R	E R	E R	E R	E R	E R
	170V 68K	120V 20K	170V 15K	170V 15K	170V 10K	250V 43K	250V 43K	300V 12K	300V 12K
	250V 150K		250V 91K	250V 56K	250V 56K	300V 62K	300V 68K		
	300V 200K		300V 150K	300V 82K	300V 82K				

Note 1. Due to life considerations, only long life Nixie tubes are recommended for pulsed operation.

Note 2. The minimum supply voltage should be as stated for each tube type. However, the use of the highest voltage available, with the appropriate series resistor to maintain cathode current within the specified limits, is recommended.

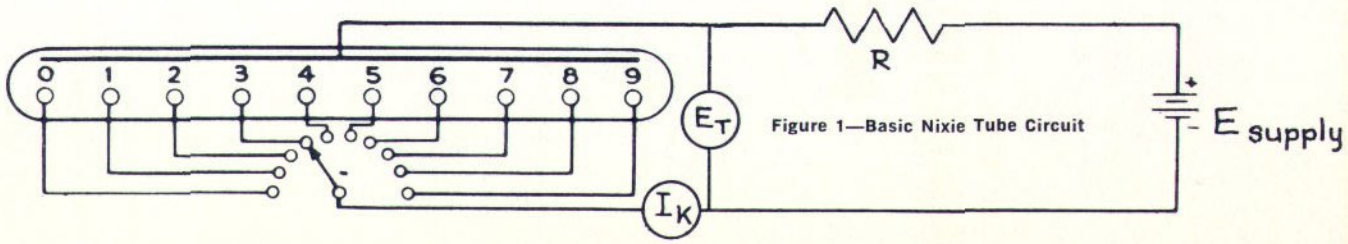

Figure 1—Basic Nixie Tube Circuit

TECHNICAL MEMORANDUM

NIXIE TUBE CHARACTERISTICS AND CIRCUIT DESIGN DATA

SUMMARY: The electrical characteristics are explained and circuit design data is discussed for the complete family of Nixie tubes including the new Ultra Long Life Series. Ionization and operating voltages as well as full glow current requirements are defined. Various methods of operating these indicator tubes such as from mechanical switches, transistors, and Beam Switching Tubes are described. The method of selecting the circuit parameters such as supply voltage, series resistance, pre-bias voltage and switching voltage are discussed. Other general design information is also given.

ELECTRICAL CHARACTERISTICS: Nixie Indicator Tubes are current operated devices. They require a **minimum cathode current** density to assure complete glow and a **maximum cathode current** limit to provide maximum life. Sufficient B+ voltage and appropriate series resistance are the means for assuring ionization and controlling the cathode within the specified limits.

Figure 1 is the basic Nixie Tube test circuit. This circuit was used to obtain the characteristic curves for the family of Nixie Tubes shown in Figure 2 and Figures 7 through 12. The same circuit with fixed B+ and fixed series resistor is used as a production test for all tubes. The B+ and fixed resistor values as well as the cathode current limits for the various Nixie tubes are shown in tabulated form under the Test Conditions section of the Electrical Data portion of this brochure.

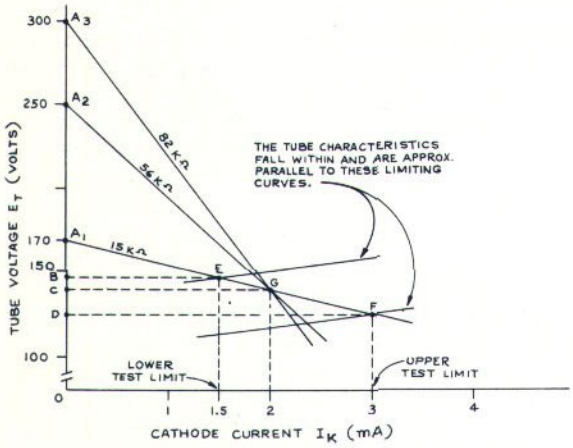

Figure 2—6844A Characteristic Curves

Figure 2 shows the limits of the tube voltage versus cathode current (E_t vs. I_k) characteristics curves for the 6844-A Nixie. **The following interpretation and discussion of the 6844-A characteristic curves applies to the curves of the other Nixie Tube types shown in Figure 7 through 12.** As shown in Figure 2, a 170 volt, 15 K ohm load line intersects the characteristic curves at points E and F corresponding to the cathode current limits of 1.5 Ma. and 3.0 Ma. Other recommended load lines are also shown. The minimum cathode current necessary for full glow of any cathode is slightly less than 1.5 Ma. for the type 6844-A. Increasing the cathode current results in greater intensity but shorter tube life. In order to obtain sufficient brilliancy and maximum tube life, the 6844-A cathode current should not exceed the limits of 1.5 Ma. to 3.0 Ma. The optimum design would be a constant current circuit providing a cathode current of 2.0 Ma. for this tube type.

SUPPLY, IONIZATION and SUSTAINING VOLTAGES: As mentioned above, the Nixie is basically a current operated device. However, the voltage necessary to provide the required cathode current is also very important for satisfactory operation of the Nixie tube. As shown in the Electrical Data Section of this brochure, the recommended minimum supply voltage is the same as the maximum ionization voltage. This is to assure ionization and proper operation of the particular Nixie Tube type. For example, the maximum ionization voltage and minimum supply voltage for the type 6844-A is 170 volts. Although many 6844-A Nixie Tubes will ionize below point B (Figure 2), the ionization voltage range should be considered to extend up to point A, (170 volts). Therefore, A_1 represents the recommended minimum supply voltage. In addition, if a B+ voltage less than the minimum recommended supply voltage of 170 volts is used, a load resistor smaller than 15 K ohms would be necessary to establish the average cathode current of 2.0 Ma. for the 6844-A. The resulting loadline would intersect the limiting characteristic curves above and below the recommended cathode current limits. Again, this infers that a supply voltage of less than the B+ used in the production tests is not good engineering practice and is not recommended.

In figure 2, points E and F projected onto the ordinate establish points B and D. The distances OB and OD, therefore, represent the limits of sustaining or tube voltage drops as the operating point moves along the 15 K ohm loadline from point E to point F.

PRE-BIAS: Voltage swings lower in amplitude than the recommended minimum supply voltage can be used to operate Nixie tubes by pre-biasing the "off" cathodes as seen in Figure 3. **Pre-bias voltage is defined here as the potential difference between the "on" cathode and the "off" cathodes.** The curve in

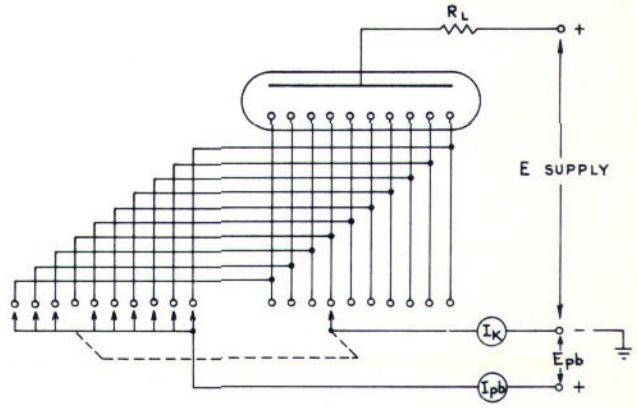

Figure 3—Basic Nixie Tube Pre-Bias Circuit

Figure 4 indicates how the current of the "off" cathodes varies as the pre-bias voltage varies. The circuit in Figure 3 can be used to observe the effects of pre-bias. As shown, if the "off" cathodes' voltage is raised above the anode voltage (B+ minus drop across R_L), they will take over as the anode and accept electron current. The anode and series anode resistor would then lose control of limiting the "on" cathode's current. Figure 4 also shows that as the "off" cathodes' voltage is lowered below the anode voltage, they will accept ion current. If this ion current is excessive, all of the "off" cathodes will become visible as a background haze. From this discussion it can be seen the upper limit of the pre-bias voltage is less than the lowest anode voltage

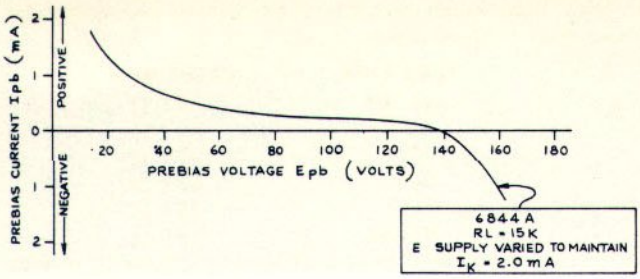

Figure 4—Pre-Bias Voltage vs. Current Characteristics of the Type 6844A Nixie Tube

of the "high current" Nixie tube (point D, Figure 1). The lower limit of the pre-bias voltage is determined by the objection to the eye of the background haze. It should be noted that a red filter eg. wratten "A" minimizes the background glow in the Ultra Long Life Series and as a result a lower pre-bias voltage than shown in the following chart (for the Ultra Long Life Series) can be used. As a rule of thumb, the lower limit of pre-bias voltage is one-half of the sustaining or operating voltages (voltage between "on" cathode and anode). The table below illustrates typical pre-bias voltage limits:

Tube Type	Pre-Bias Voltage Limits (referenced to "on" cathode)
7009	60 V to 75 V
B4021	50 V to 75 V
B4032	75 V to 120 V
6844-A	75 V to 120 V
B5031	75 V to 120 V
7153	75 V to 120 V
B6033	75 V to 120 V

The lower the pre-bias voltage, the lower is the voltage swing required from the driving source. For example, the driving source would have to provide an eighty volt signal to lower the newly selected cathode from the pre-bias voltage of eighty volts to ground or to the potential of the "on" cathode.

SERIES RESISTOR: For most 6844-A applications, the results obtained by using a 170 volt supply voltage in conjunction with the 15 K ohm load resistor are satisfactory. In many applications, it is preferred to keep the resulting range of cathode currents and glow intensities to a minimum. One way of accomplishing this is to select a higher supply voltage and use an appropriate higher value of load resistance. The higher the B+ and series resistor, the more nearly the circuit approaches a constant current one and, as a result, better Nixie tube operation is obtained.

The method of selecting the series load resistance, knowing the available supply voltage, is as follows:

(1) Select the desired center value of cathode current, e.g. 2.0 Ma. for the type 6844-A.

(2) Erect a line normal to the abscissa at this point. This normal line will intersect a line drawn midway between and parallel to the limi.ing characteristic curves at point G.

(3) Connect this point G with the selected supply voltage on the ordinate, e.g. 250 volts point A_2. The inverse slope of this line will represent the necessary load impedance which in this case is 56 K ohms. In other words the voltage drop across the series resistor must be such that the sustaining or tube voltage is the same for all values of supply voltage. For the 6844-A type, the series R_L in K ohms for any given supply voltage is B+ minus 140 volts (average sustaining voltage) divided by 2.0 Ma. (average cathode current). It is evident that the range of cathode current diminishes as the slope of the loadline becomes steeper. Therefore, a higher supply voltage is always preferred; e.g. point A_3, as compared to A_1.

BEAM SWITCHING TUBE DRIVE: The ideal driver for Nixie Tubes is a constant current source, e.g. the Beam Switching Tube. In addition to Figure 5, additional specific circuits using Beam Switching and Nixie tubes can be found in Bulletin 826 and Supplement 1, describing the Burroughs line of decade counters.

Beam Switching Tubes and Nixie Tubes have been designed as companion units for those applications requiring both counting and visual readout. Their operating voltages and currents are compatable so that optimum performance of the Nixie Tube readout can be assured. In addition, the Beam Switching Tube can operate multiple Nixie tube displays, even remotely located several hundred feet away.

In many applications, a Beam Switching Tube can effectively replace eighteen transistors (ten high voltage ones) and forty diodes. New miniature Beam Switching Tubes, type BD-203 and shielded type BD-316, are now available. These new miniature Beam Switching Tubes have been designed to (1) allow smaller packaging, (2) be compatable with transistor drive circuits, and (3) provide Nixie Tube readout.

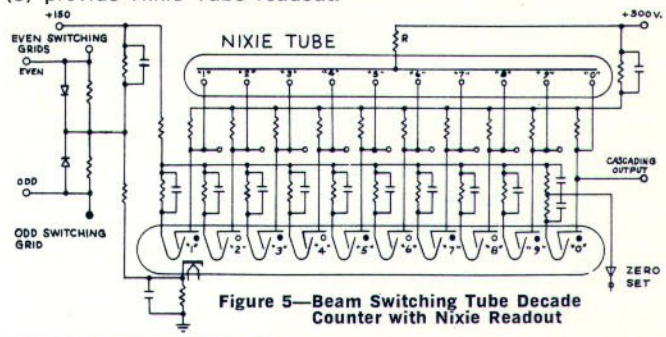

Figure 5—Beam Switching Tube Decade Counter with Nixie Readout

TRANSISTOR DRIVE: The pre-bias limits of the Nixie tube imposes voltage requirements on transistors used to drive them. The pre-bias voltage is the back voltage requirement imposed on the transistor. This implies that transistors with 75 to 100 volt ratings are required. Two such transistors are the RCA 2N398 and GT 1200. The 2N398 is a PNP Xistor and requires nine transistors to be conducting. The "cut-off" 2N398 would be associated with the "on" Nixie tube cathode. The GT 1200 is a NPN Xistor and the one associated with the "on" cathode would be conducting. There are many other transistors capable of driving the Nixie tubes. The Nixie tube types more compatible with transistors are the 7009 and B4021 (BD-244). Both of these tubes can be pre-biased to a lower voltage and hence require a lower drive signal. The difference in the tubes as noted in Figure 7 are the tighter production limits and lower B+ voltage requirements for the B4021.

IONIZATION TIME: Ionization time of the Nixie tubes is an inverse function of the number of available free ions in the tube and the applied voltage. It may be anywhere from 10 microseconds to 100 microseconds or more. The number of free ions can be increased either by subjecting the tube to radiation or by ionizing an unused pin or cathode through a high resistance, e.g. 20 Megohms.

FILTERS: For many applications, the use of a light filter may enhance the appearance and readability of the Nixie Tubes. Circular polarized filters (Type HNCP manufactured by Polaroid Corp. Cambridge, Mass.) eliminate reflected light and improve contrast. In addition two layers of the material can be oriented to control the light intensity over a wide range. Polaroid Corp. offers a Type HACP Amber filter which makes both regular and Ultra Long Life Nixie Tubes appear identical. The same effect is obtained with red or red tinted filters; e.g. wratten A.

DIMMING: Many applications require a lower light output from the Nixie Tube. Methods of employing filters to control intensity are mentioned in the Filters Section of this brochure. The light output of a Nixie Tube is a function of the average cathode current. Since the Nixie is a current operated device and, in addition, a minimum cathode current density is required to assure full numerical glow, it is not recommended to reduce the cathode current below the lower test point (see I_K minimum Test Condition portion, Electrical Data Section) since partial glow may result. This implies that increasing the series resistor as a means of reducing cathode current and hence output intensity is not recommended. One method of electrically controlling the output intensity is to vary the duty cycle of the cathode current by employing a pulsed operation. This pulsed operation of the peak cathode current has been limited to the average DC current. In this way, the light output has been reduced without a sacrifice of tube life. In this type of operation, the human eye functions as a light integrator sensing only the average brightness of the light impulses.

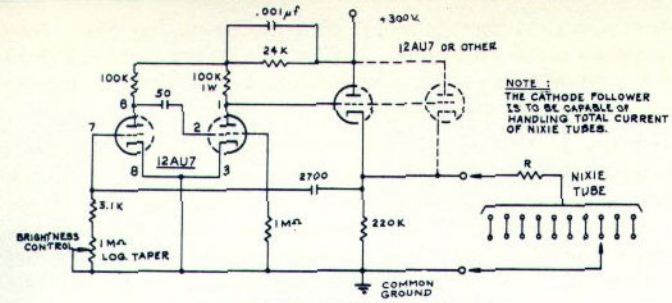

Figure 6—Nixie Tube Dimming Circuit

The circuit, as shown in Figure 6, consists of a free-running multivibrator, one output of which is directly coupled to a cathode follower. The multivibrator produces positive pulses of 200 volts amplitude and 100 microseconds duration at variable repetition rates. The high output impedance of the multivibrator is transformed by the cathode follower to a low impedance source driving the Nixie Tube or Tubes.

The cathode follower is also made a functional part of the multivibrator charging the large 2700 $\mu\mu$F capacitor by its output. Plate one of the multivibrator is thereby allowed quickly to recover to its positive buss being loaded only by the high impedance input of the cathode follower.

The 1.0 megohm potentiometer is part of the time constant that determines the repetition rate of positive pulses appearing at the output and is therefore used as a brightness control. Potentiometers having a logarithmic or similar taper will allow the brightness of the Nixie Tube to be a nearly linear function of the control shaft's displacement.

The cathode follower swings between approximately 50 volts and 250 volts above ground in accordance with the output of the multivibrator and must be capable of handling the total current required for the number of Nixie Tubes used. The type 12AU7 tube can handle several Nixie Tubes and is, therefore, sufficient for most applications of this circuit. The average cathode current for various types of Nixie Tubes is tabulated under the absolute Ratings of the Electrical Data Section of this brochure and can be used to calculate the total current drain through the cathode follower.

Every Nixie Tube should have a separate current limiting resistor R whose value is shown below.

TUBE TYPE	VALUE OF R
6844-A	39 KΩ
B5031	36 KΩ
7009	100 KΩ
B4032	82 KΩ
7153	33 KΩ
B6033	27 KΩ

After the circuit has been turned off for a longer period of time (24 hours or more) and energized again, it is advisable to increase the brightness to maximum for a few seconds before operation at low brilliancy is attempted. This is necessary because of the increase in ionization time of the Nixie Tubes when de-energized for a period of time. A few seconds of operation, however, is sufficient to replenish the necessary supply of free ions in the tube and reduce the ionization time.

For optimum results, the impedance in the cathode circuit of the Nixie Tubes should be low. The rotary selector switch used in Figure 1 is a good example. It is possible, however, to adopt this technique to those circuits where the Nixie Tube cathodes are energized by vacuum tubes or other electronic means.

LIFE: The normal dynamic life expectancy of the standard Nixie Tubes is in the order of 3000 to 5000 hours. Under the special operating condition where continuous ionization of only one of the ten cathodes is required, the life would be reduced to from 500 to 1500 hours depending upon tube type and current. It should be pointed out, however, that this static type of operation is unrealistic for most applications. If the cathodes are changed sequentially as infrequently as once a day (24 hours), the life would then be extended to the 3000 to 5000 hour range. The Ultra Long Life Series of Nixie Tube types recently announced have both a static and dynamic life expectancy of at least 20 times that mentioned above. They have the added advantage of greatly increased life for those applications requiring continuous display of one of the ten characters for extended periods of time. Under these stringent conditions a minimum of 20,000 hours static on one numeral can be expected. Where the display is changed sequentially, even as infrequently as every 100 hours, life in excess of 100,000 hours can be expected.

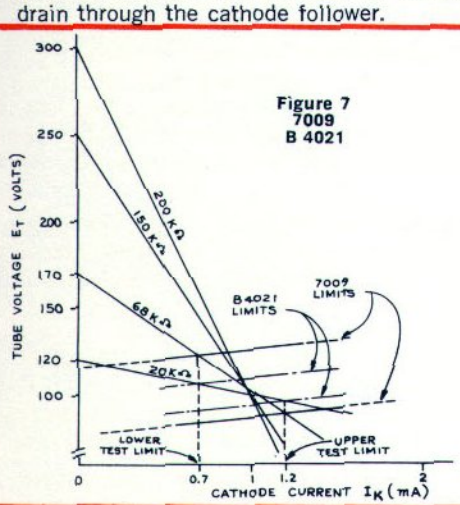

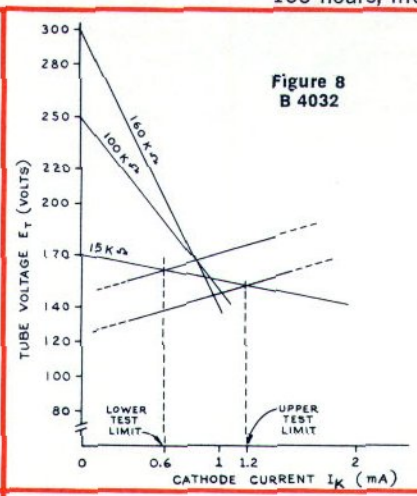

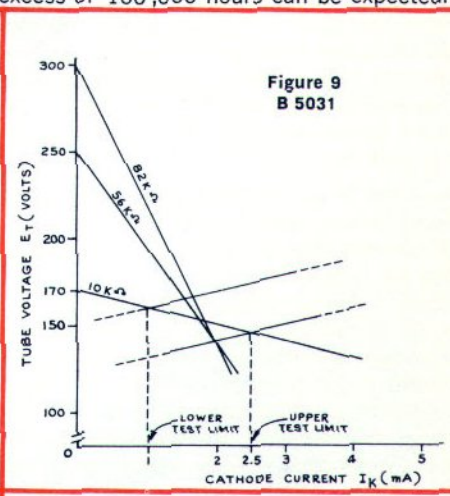

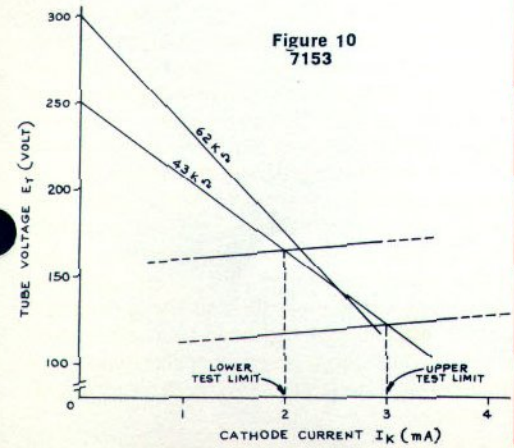

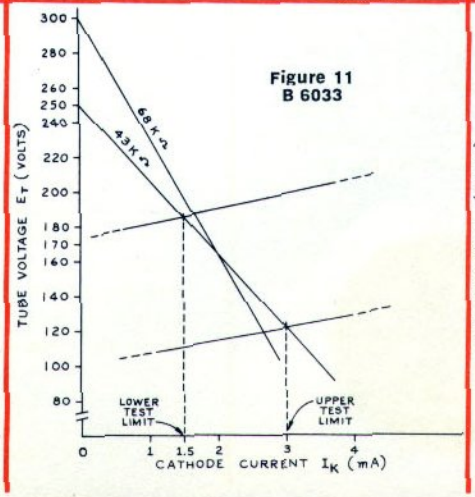

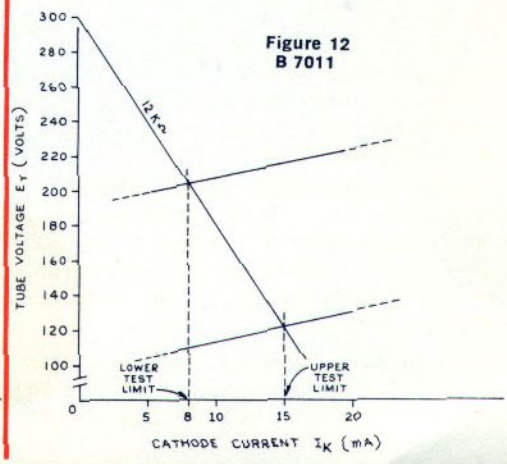

SPECIAL INDICATOR TUBES

SPECIAL CHARACTER TUBES

Nixie tubes which contain special characters are available in Miniature, Standard and Super sizes. Typical of the characters which can be displayed are:

1. All twenty-six letters of the alphabet
2. Plus and Minus signs
3. Omega, <, >, etc.

In all cases, as many as ten of these characters can be contained in one tube without difficulty. In special cases, it is sometimes possible to employ as many as twelve characters in a single tube. In addition, characters can be combined with digits to form alpha-numerical displays in all tube sizes.

Due to the particularly heavy demand for plus and minus and alphabet tubes, certain types are maintained in stock for immediate delivery. They are the following:

Miniature Size
B4022 (BD-255)—plus and minus
B4028 —plus and minus (low voltage type)
B4031 —plus and minus (long life type)

Standard Size
B5016 (BD-214)—plus and minus
B5032 —plus and minus (long life type)
B5018 (BD-216)—A through K less I
B50113 (BD221)—L through X less O, Q, and U

Super Size
B6012 (BD-225)—plus and minus
B6034 —plus and minus (long life type)

Electrical and mechanical characteristics of special character tubes are generally the same as those for the regular lines of Nixie tubes to which they correspond; e.g. B4022 comparable to 7009; B4028 comparable to B4021; B4031 comparable to B4032; etc.

PIXIE POSITION INDICATOR TUBE HB105

TENTATIVE SPECIFICATIONS

The HB-105 is a gas filled, cold cathode, 10 position read-out device, having a common anode. It features 10 glow positions, 36° apart, visible through 10 numerical perforations (0 to 9) in the common anode, in the manner of an internal bezel with the indicated number determined by the positions of the glow discharge. Advantages of this tube are its ability to ionize more than one cathode simultaneously and it operates at very low currents.

MECHANICAL DATA:

Overall length . . . 1.380" max.
Base to hold-down line 1.125" max.
Bulb diameter . . . 1.080" max.
Envelope connections . see table
Socket . . . . . (HSK-111)
Weight . . . . . 1 oz. max.
Mounting Position . . Any

ELECTRICAL DATA:

1. Absolute ratings:
   - Ionization voltage . . . . . 150 V DC minimum
   - Cathode current . . . . . 0.25 MA average
   - Cathode current . . . . . 0.60 MA peak
   - Individual cathode wattage . . . . .08 watts maximum
2. Test conditions: See Basic Circuit — Fig. 1, pg. 4
   - Anode supply voltage . . . . . 150 V DC
   - Anode series resistor . . . . . 82 K ohms
   - Cathode current . . . . . 0.200 MA minimum
     0.350 MA maximum

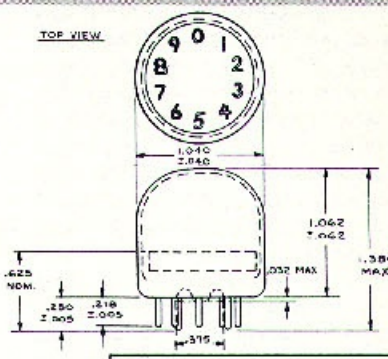

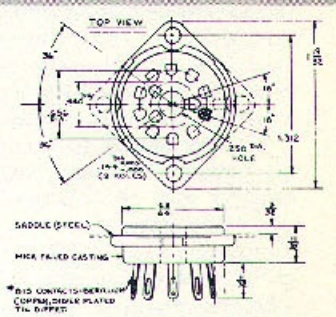

SOCKET HSK111

ENVELOPE CONNECTIONS			
			10 = "3"
1 = "2"	4 = "9"	7 = "6"	11 = ANODE
2 = "1"	5 = "8"	8 = "5"	12 = ANODE
3 = "0"	6 = "7"	9 = "4"	13 = ANODE

BI-QUINARY BD310

The Bi-Quinary is a tube which contains ten cathodes (digits 0-9) and is similar mechanically to the standard 6844A Nixie tube. However, the tube is designed as an indicator for a binary coded decimal or biquinary counter. This is accomplished by isolating the odd and even cathodes by means of a shield electrode and by the utilization of 2 anodes, one for the odd cathodes and one for the even cathodes.

1. The "off" cathodes' voltage must be less than 75 volts and greater than fifty volts regardless of the B+ used. R_K is used to limit bleeder current when pre-biasing the "off" cathodes. The "off" cathodes can also be left floating.
2. The "off" anode voltage must be less than 75 volts regardless of the B+ used for the "on" anode.
3. The shield must be less than 75 volts.
4. Various values of B+ can be used of the "on" anode by using the appropriate series resistor.

B+	R
150 V	20K
175 V	30K
200 V	39K

5. Test Conditions: (Refer to typical circuit)
   - Anode supply voltage .....150 V.
   - Anode resistor .....20 K.
   - OFF anode voltage .....65 V.
   - OFF cathode voltage .....65 V.
   - Shield voltage .....65 V.
   - Cathode current ....1.5 Ma. Min.
     3.5 Ma. Max.

TYPICAL CIRCUIT

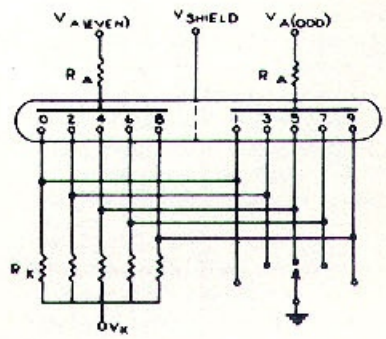

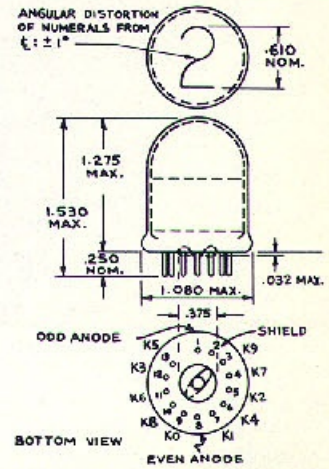

ELECTRONIC CONTRIBUTIONS BY

Burroughs Corporation

ELECTRONIC COMPONENTS DIVISION
PLAINFIELD, NEW JERSEY
Formerly Electronic Tube Division