SPECIAL INDICATOR TUBES

SPECIAL CHARACTER TUBES

Nixie tubes which contain special characters are available in Miniature, Standard and Super sizes. Typical of the characters which can be displayed are:

1. All twenty-six letters of the alphabet
2. Plus and Minus signs
3. Omega, <, >, etc.

In all cases, as many as ten of these characters can be contained in one tube without difficulty. In special cases, it is sometimes possible to employ as many as twelve characters in a single tube. In addition, characters can be combined with digits to form alpha-numerical displays in all tube sizes.

Due to the particularly heavy demand for plus and minus and alphabet tubes, certain types are maintained in stock for immediate delivery. They are the following:

Miniature Size
B4022 (BD-255)—plus and minus
B4028 —plus and minus (low voltage type)
B4031 —plus and minus (long life type)

Standard Size
B5016 (BD-214)—plus and minus
B5032 —plus and minus (long life type)
B5018 (BD-216)—A through K less I
B50113 (BD221)—L through X less O, Q, and U

Super Size
B6012 (BD-225)—plus and minus
B6034 —plus and minus (long life type)

Electrical and mechanical characteristics of special character tubes are generally the same as those for the regular lines of Nixie tubes to which they correspond; e.g. B4022 comparable to 7009; B4028 comparable to B4021; B4031 comparable to B4032; etc.

PIXIE POSITION INDICATOR TUBE HB105

TENTATIVE SPECIFICATIONS

The HB-105 is a gas filled, cold cathode, 10 position read-out device, having a common anode. It features 10 glow positions, 36° apart, visible through 10 numerical perforations (0 to 9) in the common anode, in the manner of an internal bezel with the indicated number determined by the positions of the glow discharge. Advantages of this tube are its ability to ionize more than one cathode simultaneously and it operates at very low currents.

MECHANICAL DATA:

Overall length . . . 1.380" max.
Base to hold-down line 1.125" max.
Bulb diameter . . . 1.080" max.
Envelope connections . see table
Socket . . . . . (HSK-111)
Weight . . . . . 1 oz. max.
Mounting Position . . Any

ELECTRICAL DATA:

1. Absolute ratings:
   - Ionization voltage . . . . . 150 V DC minimum
   - Cathode current . . . . . 0.25 MA average
   - Cathode current . . . . . 0.60 MA peak
   - Individual cathode wattage . . . . .08 watts maximum
2. Test conditions: See Basic Circuit — Fig. 1, pg. 4
   - Anode supply voltage . . . . . 150 V DC
   - Anode series resistor . . . . . 62 K ohms
   - Cathode current . . . . . 0.200 MA minimum
     0.350 MA maximum

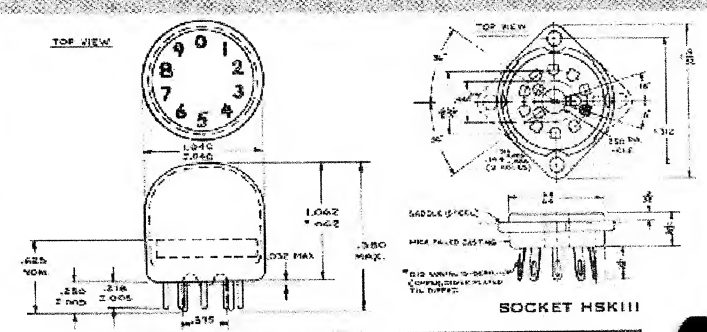

ENVELOPE CONNECTIONS			
			10 = "3"
1 = "2"	4 = "9"	7 = "6"	11 = ANODE
2 = "1"	5 = "8"	8 = "5"	12 = ANODE
3 = "0"	6 = "7"	9 = "4"	13 = ANODE

BI-QUINARY BD310

The Bi-Quinary is a tube which contains ten cathodes (digits 0-9) and is similar mechanically to the standard 6844A Nixie tube. However, the tube is designed as an indicator for a binary coded decimal or biquinary counter. This is accomplished by isolating the odd and even cathodes by means of a shield electrode and by the utilization of 2 anodes, one for the odd cathodes and one for the even cathodes.

1. The "off" cathodes' voltage must be less than 75 volts and greater than fifty volts regardless of the B+ used. R_K is used to limit bleeder current when pre-biasing the "off" cathodes. The "off" cathodes can also be left floating.
2. The "off" anode voltage must be less than 75 volts regardless of the B+ used for the "on" anode.
3. The shield must be less than 75 volts.
4. Various values of B+ can be used of the "on" anode by using the appropriate series resistor.

B—	R
150 V	20K
175 V	30K
200 V	39K

5. Test Conditions: (Refer to typical circuit)
   - Anode supply voltage .....150 V.
   - Anode resistor .....20 K.
   - OFF anode voltage .....55 V.
   - OFF cathode voltage .....65 V.
   - Shield voltage .....65 V.
   - Cathode current ....1.5 Ma. Min.
     3.5 Ma. Max.

TYPICAL CIRCUIT

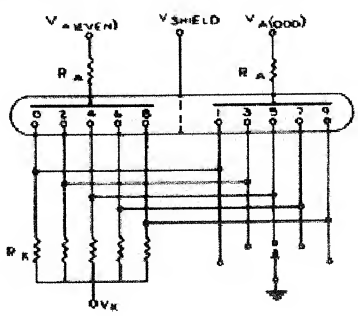

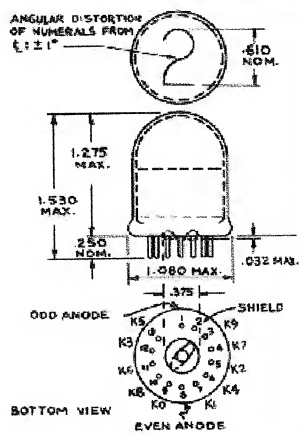

ELECTRONIC CONTRIBUTIONS BY
Burroughs Corporation
ELECTRONIC COMPONENTS DIVISION
PLAINFIELD, NEW JERSEY
Formerly Electronic Tube Division