RECTANGULAR MONITOR TUBE with metal-backed screen, electrostatic focusing and 70° magnetic deflection

SCREEN

	Metal backed	white
	Useful diagonal	min. 390 mm
	Useful width	min. 362 mm
	Useful height	min. 273 mm

For screen properties please refer to front of this section

HEATING

Indirect by A.C. or D.C.; series or parallel supply

Heater voltage	V_f = 6.3 V
Heater current	I_f = 300 mA

CAPACITANCES

Grid No.1 to all other electrodes	C_{g_1}	= max.	8 pF
Cathode to all other electrodes	C_k	= max.	8 pF
External conductive coating to final accelerating electrode	$C_{a,g_3,g_{5-m}}$	=	1100 pF

FOCUSING Low voltage electrostatic

DEFLECTION Double magnetic

Diagonal deflection angle 70°

RESOLUTION better than 650 lines at the centre of the screen

Measured at:

Final accelerator voltage	V_{a,g_3,g_5}	=	14 kV
Grid No.2 voltage	V_{g_2}	=	300 V
Picture height	h	=	273 mm
Brightness	B	=	170 nit [1]

Focus voltage adjusted to obtain the smallest, roundest spot

Line width controlled to 0.48 mm measured at points corresponding to 50 % of the peak brightness measured with a photomicrometer equipment

[1]) One nit is a brightness of one candela per square meter

PHILIPS

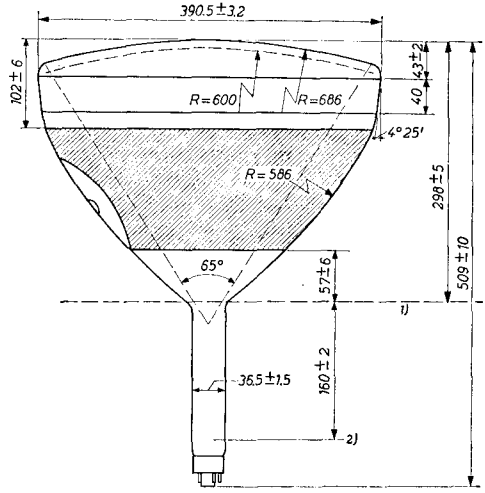

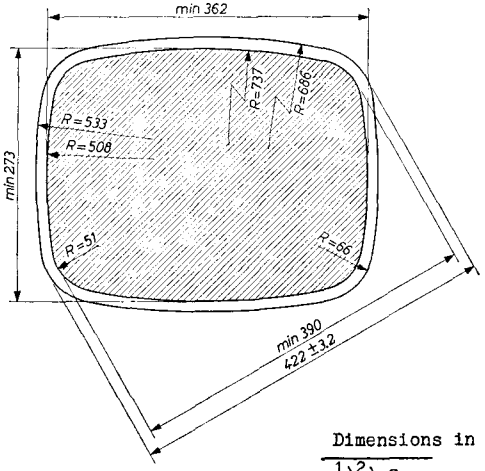

Dimensions in mm

1)2) See page 3

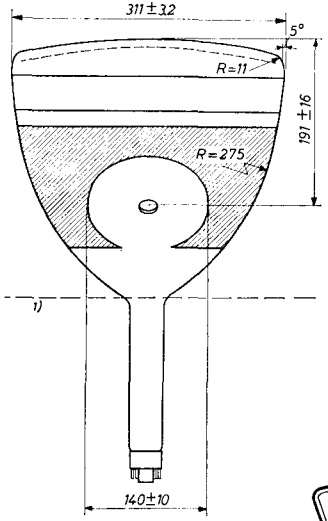

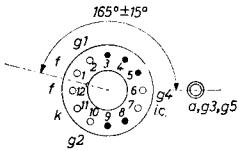

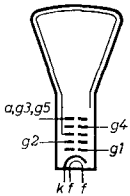

Dimensions in mm

Base: DUODECAL 7 p

Bulb contact: Recessed cavity button contact

Bulb contact connector 55563

[1]) Reference line

[2]) Centre of grid

MOUNTING POSITION

Any, except vertical with the screen downward and the axis of the tube making an angle less than 20° with the vertical

REFERENCE LINE GAUGE

The reference line is determined by the plane of the upper edge of the gauge, when it is resting on the cone. The inner surface of the coils should not extend into the shaded region.

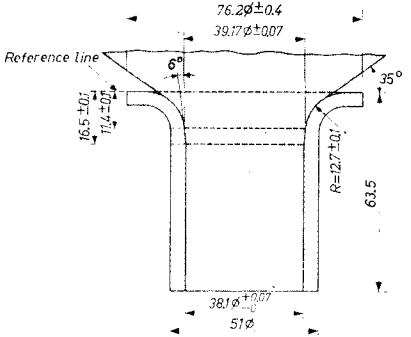

OPERATING CHARACTERISTICS

Final accelerator voltage	$V_{a,g3,g5}$	=	14 kV
Grid No.4 voltage	V_{g4}	=	-200 to +200 V[1])
Grid No.2 voltage	V_{g2}	=	300 V
Negative grid No.1 voltage for visual extinction of focused raster	$-V_{g1}$	=	30 to 70 V
Grid No.4 current	I_{g4}	=	-15 to +15 μA

[1]) With a small change in focus spot size with variation of the focusing voltage the limits of -200 V and +200 V are such that an acceptable focus quality is obtained within this range
If it is required to pass through the point of focus, a voltage of at least -300 V to +300 V will be required

LIMITING VALUES (Absolute maximum limits)

Final accelerator voltage	V_{a,g_3,g_5}	= max.	16 kV
		= min.	10 kV
Grid No.4 voltage			
positive value	$+V_{g_4}$	= max.	500 V
negative value	$-V_{g_4}$	= max.	500 V
Grid No.2 voltage	V_{g_2}	= max.	500 V
		= min.	250 V
Grid No.1 voltage			
negative value	$-V_{g_1}$	= max.	200 V
positive value	$+V_{g_1}$	= max.	0 V[1]
peak positive value	$+V_{g_1\,p}$	= max.	2 V[2]
Grid No.4 current	I_{g_4}	= -25 μA to +25 μA	
Grid No.2 current	I_{g_2}	= -15 μA to +15 μA	
Voltage between heater and cathode			
cathode positive	V_{kf} (k pos.)	= max.	200 V[3]
cathode positive peak value	V_{kfp}(k pos.)	= max.	300 V[4]
cathode negative	V_{kf} (k neg.)	= max.	125 V[3]
cathode negative peak value	V_{kfp}(k neg.)	= max.	250 V

MAXIMUM CIRCUIT VALUES

External resistance between heater and cathode	R_{kf}	= max. 1.0 MΩ
External impedance between heater and cathode at frequency of 50 c/s	Z_{kf}(f=50 c/s)	= max. 0.1 MΩ
External grid No.1 resistance	R_{g_1}	= max. 1.5 MΩ
External grid No.1 impedance at frequency of 50 c/s	Z_{g_1}(f=50 c/s)	= max. 0.5 MΩ

[1]) The D.C. value of the grid bias must not be allowed to become positive with respect to the cathode, except during the period immediately after switching the equipment on or off, when it may be allowed to rise to +1 V

[2]) At this maximum allowed positive grid excursion the grid current may be expected to be approximately 2 mA

[3]) In order to avoid excessive hum the A.C. component of the heater to cathode voltage should be as low as possible and in each case lower than 20 V (R.M.S.)

[4]) During a warming-up period not exceeding 45 sec, the peak value is allowed to rise to 410 V

PHILIPS

AW43-48

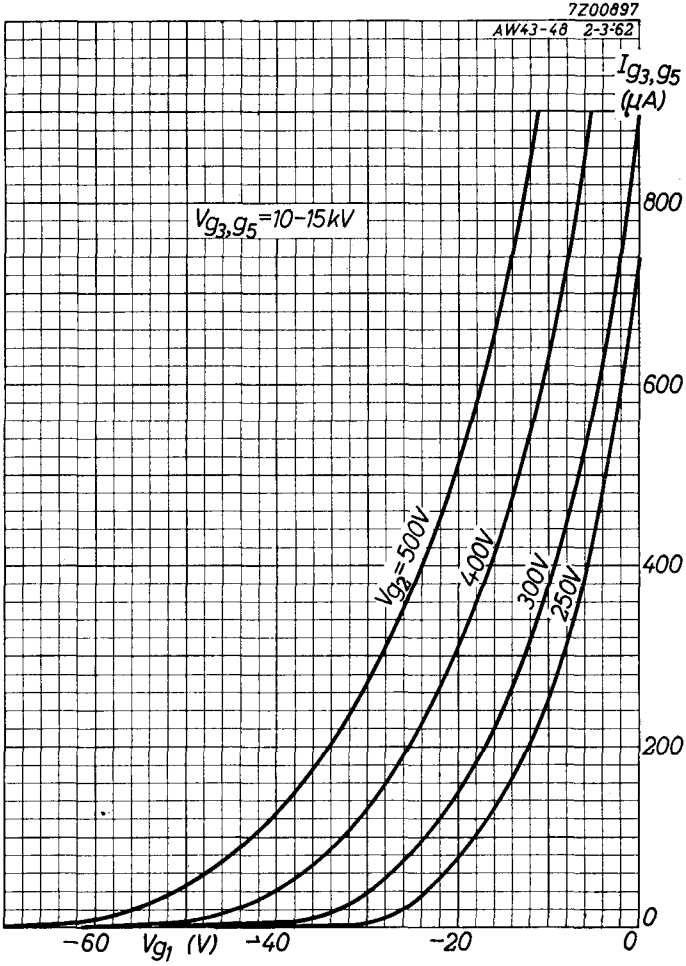

3.3.1963

A

PHILIPS

7Z00896

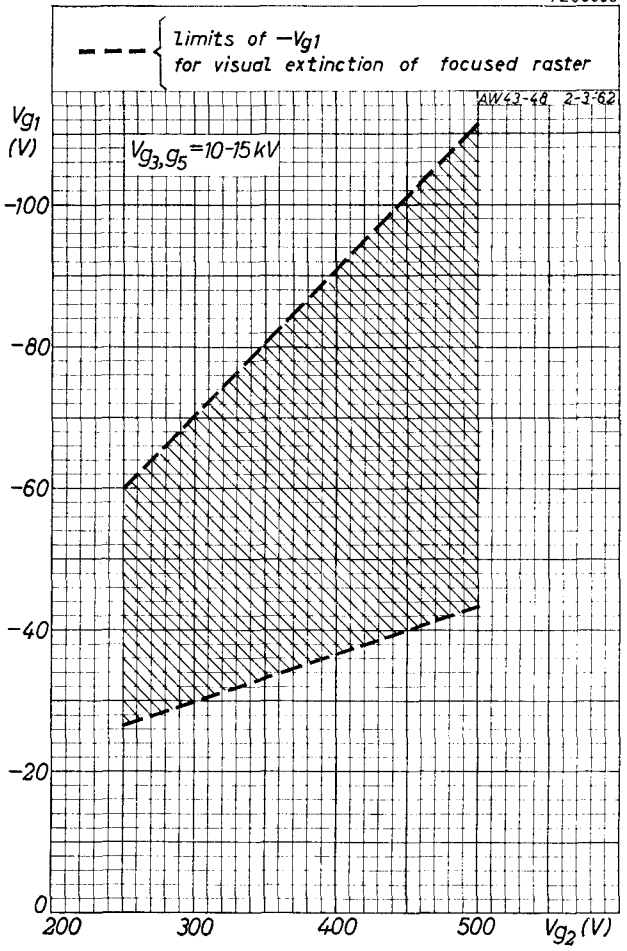

B

PHILIPS

Electronic Tube HANDBOOK

AW43-48

page	sheet	date
1	1	1963.03.03
2	2	1963.03.03
3	3	1963.03.03
4	4	1963.03.03
5	5	1963.03.03
6	A	1963.03.03
7	B	1963.03.03
8	FP	2000.03.06