Colour Picture Tubes

A 66–140 X
A 66–410 X

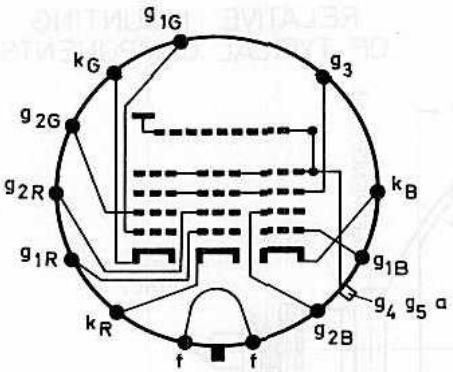

ITT-Picture Tube A 66–140 X (A 66–410 X) is a rectangular colour picture tube with 110° deflection angle and 36,5 mm neck diameter. The useful screen area of 2030 cm² (appr.) has nearly straight sides of 52 x 39 cm (appr.) with 3 x 4 aspect ratio. The filterglass of the faceplate has a light transmission of 52% (appr.).
The phosphor screen is composed of triangular dot groups – colour triplets – each consisting of a red-, green- and blue-emitting phosphor dot. The green- and blue-emitting phosphors are silver activated sulfide phosphors, the red emitting phosphor is composed of yttrium compounds activated with rare-earths.
The tube uses three electrostatically focused guns and operates on the shadow mask principle.
The gun axes are tilted slightly towards the tube axis to facilitate convergence to the shadow mask. Beam-convergence and deflection are provided magnetically.
Implosion protection by steel reinforcement. Admitted by Association of German Electrical Engineers, VDE.

1. Generalities

Bulb	All-Glass Type with Convex Rectangular Faceplate Filter-Glass	
Internal Magnetic Shield		
Minimum Useful Screen Dimensions	Diagonal	618 mm
	Horizontal	518 mm
	Vertical	390 mm
	Aspect Ratio	3 x 4
	Area (approx.)	2030 cm²
Deflection Angles	Diagonal	110°
	Horizontal	97°
	Vertical	77°
Neck Diameter	36,5 mm	
Weight	20 kg (approx.)	
Base	JEDEC B 12-244 14-20/1 DIN 44439 (Long Design)	
Heating Time ⑪	5s A 66-410 X (approx.)	
Implosion Protection	Steel Reinforcement IncludingMountingLugs	

2. Typical Operating Conditions ①

U_f ②	6,3 V
I_f A 66–140 X	(approx.) 0,820 A
I_f A 66–410 X	(approx.) 0,730 A
U_{g4g5a}	25 kV
U_{g3}	4,2 . . . 5,0 kV
$U_{g2\ cutoff}$ ③ ④ at $(-U_{g1}) = 105$ V	210 . . . 495 V
$(-U_{g1})_{cutoff}$ ④ at $-U_{g2} = 300$ V	70 . . . 140 V

3. Maximum Ratings ⑧

$U_{g4g5a\ max}$ ⑥	27,5 kV
$U_{g4g5a\ min}$	20 kV
$I_{g4g5a\ max}$ ⑤	1,0 mA
$U_{g3\ max}$	6,0 kV
$U_{g2\ p\ max}$	1,0 kV
$(-U_{g1})_{p\ max}$	400 V
$(-U_{g1})_{max}$	200 V
$U_{g1\ max}$	0 V
$U_{g1\ p\ max}$	2 V
$U_{-f/k\ max\ 1}$ ⑨ ⑩	410 V
$U_{-f/k\ max\ 2}$ ⑨ ⑩	250 V
$U_{-f/k\ p\ max}$ ⑨	300 V
$U_{+f/k\ p\ max}$ ⑨	180 V
$U_{+f/k\ max}$ ⑨	135 V

4. Ratings for Circuit Design ⑦

I_{g3}	$\leq \pm 15\ \mu A$
I_{g2}	$\leq \pm 5\ \mu A$
I_{g1} $(-U_{g1} = 150$ V)	$\leq \pm 5\ \mu A$

5. Capacitances

C_{g1}	approx.	7 pF
C_k	approx.	5 pF
C_{g3}	approx.	7 pF
$C_{g4g5a/m\ max}$		2500 pF
$C_{g4g5a/m\ min}$		2000 pF
$C_{g4g5a/m}$ '	approx.	500 pF

6. Optical Data

Faceplate:	Filter-Glass
Light Transmission	(appr.) 52 %

Screen:
Three separate phosphor dots – colour triplets – arranged in triangular groups and aluminized.
Spacing between centres of adjacent triplets nearest centre of screen 0,81 mm (appr.)

Colour Picture Tubes

A 66–140 X
A 66–410 X

Dimensional Drawings in mm

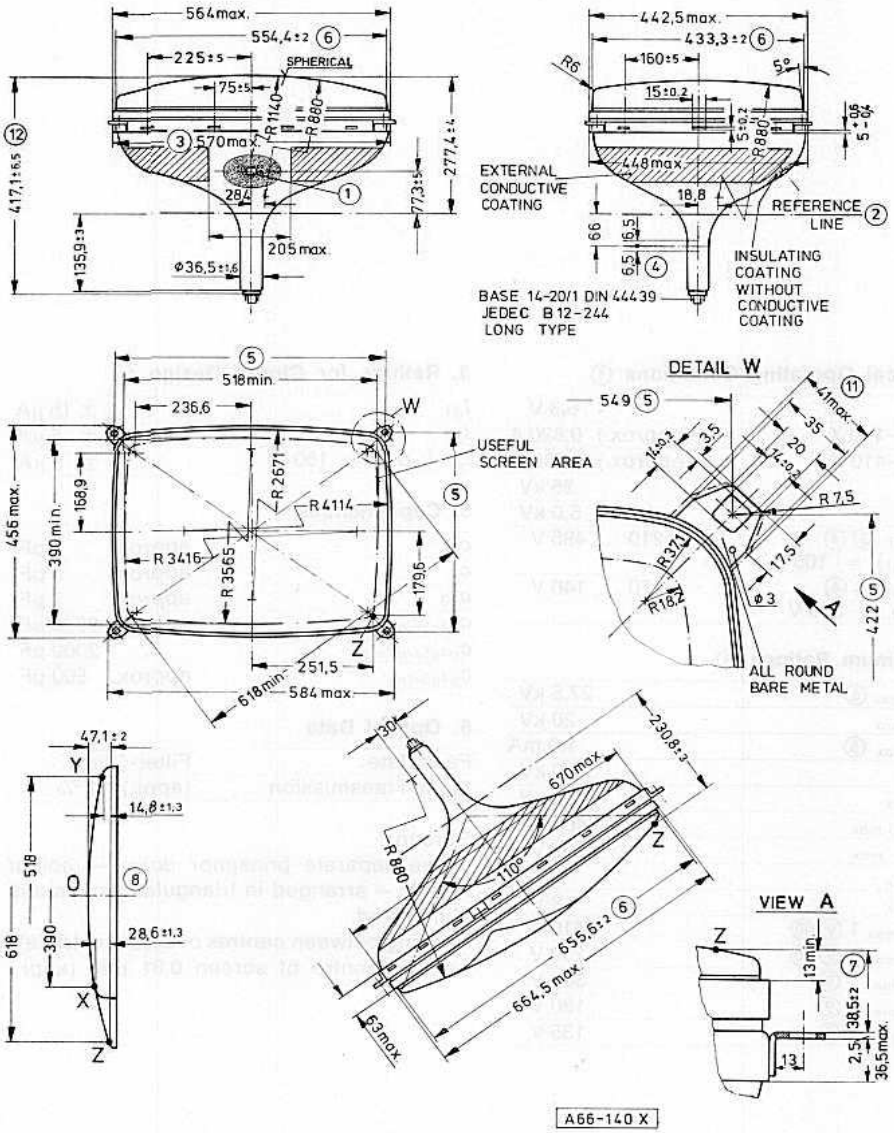

O Notes see pages 68 and 69

Reference line gauge see page 66

RELATIVE MOUNTING
OF TYPICAL COMPONENTS

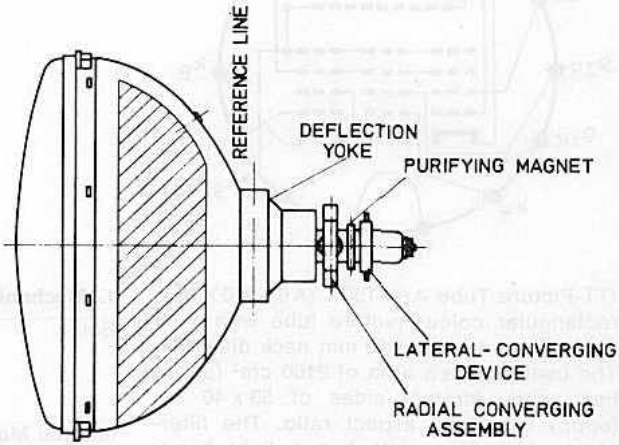

LOCATION OF RADIAL-CONVERGING
POLE PIECES

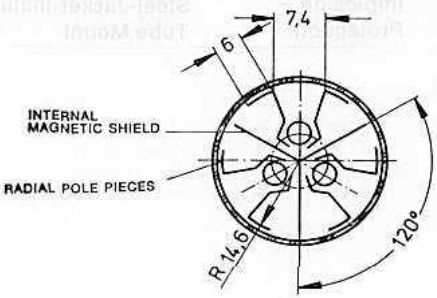
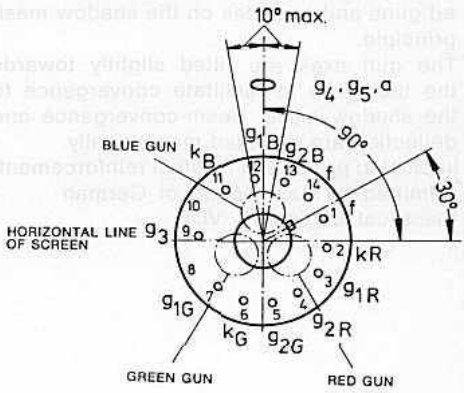
BOTTOM VIEW OF BASE