Colour Picture Tubes

A 63–11 X and A 63–200 X

For Replacement

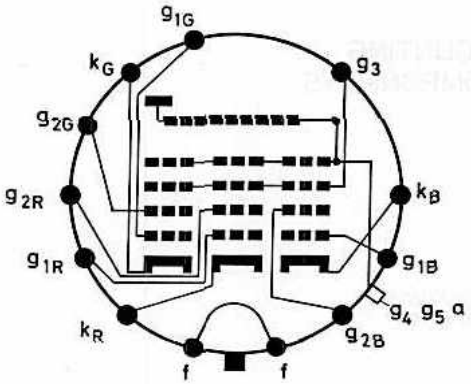

ITT-Picture Tube A 63–11 X (A 63–200 X) is a rectangular colour picture tube with 89° deflection angle and 36,5 mm neck diameter.
The useful screen area of 2000 cm² (appr.) has nearly straight sides of 50 x 40 cm (appr.). The filter-glass of the faceplate has a light transmission of 52 % (appr.).
The phosphor screen is composed of triangular dot groups – colour triplets – each consisting of a red-, green- and blue-emitting phosphor dot. The green- and blue-emitting phosphors are silver activated sulfide phosphors, the red emitting phosphor is composed of yttrium compounds activated with rare-earths.
The tube uses three electrostatically focused guns and operates on the shadow mask principle.
The gun axes are tilted slightly toward the tube axis to facilitate convergence to the shadow mask. Beam-convergence and deflection are provided magnetically.
Implosion protection by steel reinforcement. Admitted by Association of German Electrical Engineers, VDE.

1. Mechanical Data

Bulb	All-Glass Type with Convex Rectangular Faceplate Filter-Glass	
Minimum Useful Screen Dimensions	Diagonal	584 mm
	Horizontal	504 mm
	Vertical	396 mm
	Area (appr.)	2000 cm²
Deflection Angles	Diagonal	89°
	Horizontal	78°
	Vertical	63°
Neck Diameter	36,5 mm	
Overall Length	526 ± 9,5 mm	
Weight	19 kg (appr.)	
Base	JEDEC B 12-244 14-20/1 DIN 44439	
Implosion Protection	Steel-Jacket Including Tube Mount	

2. Typical Operating Conditions ①

U_f ②		6,3 V
I_f	(approx.)	0,9 A
U_{g4g5a}		25 kV
U_{g3}		4,2 . . . 5,0 kV
$U_{g2\ cutoff}$ ③ ④ (at $(-U_{g1}) = 150$ V)		285 . . . 685 V
$(-U_{g1})_{cutoff}$ ④ (at $U_{g2} = 400$ V)		95 . . . 190 V

3. Maximum Ratings ⑧

U_{g4g5a} max ⑥		27,5 kV
U_{g4g5a} min		20 kV
I_{g4g5a} max ⑤		1,0 mA
U_{g3} max		6,0 kV
$U_{g2\ p}$ max		1,0 kV
$(-U_{g1})_p$ max		400 V
$(-U_{g1})$ max		200 V
U_{g1} max		0 V
$U_{g1\ p}$ max		2 V
$U_{-f/k}$ max 1 ⑨ ⑩		410 V
$U_{-f/k}$ max 2 ⑨ ⑩		250 V
$U_{-f/k\ p\ max}$ ⑨		300 V
$U_{+f/k\ p\ max}$ ⑨		180 V
$U_{+f/k}$ max ⑨		135 V

4. Ratings for Circuit Design ⑦

I_{g3}	$\leq -45 \ldots +15$ µA
I_{g2}	$\leq \pm 5$ µA
I_{g1} $(-U_{g1} = 150$ V)	$\leq \pm 5$ µA

5. Capacitances

c_{g1}		(approx.)	6 pF
c_k		(approx.)	5 pF
c_{g3}		(approx.)	6,5 pF
$c_{g4g5a/m\ max}$			3000 pF
$c_{g4g5a/m\ min}$			2000 pF
$c_{g4g5a/m'}$	A 63–11 X	(approx.)	400 pF
$c_{g4g5a/m'}$	A 63–200 X	(approx.)	280 pF

6. Optical Data

Faceplate:	Filter-Glass
Light Transmission	(appr.) 52%

Screen:
Three separate phosphor dots – colour triplets – arranged in triangular groups and aluminized.
Spacing between centres of adjacent triplets *nearest centre of screen 0,74 mm (appr.).*

Colour Picture Tubes

A 63–11 X

For Replacement

Dimensional Drawings in mm

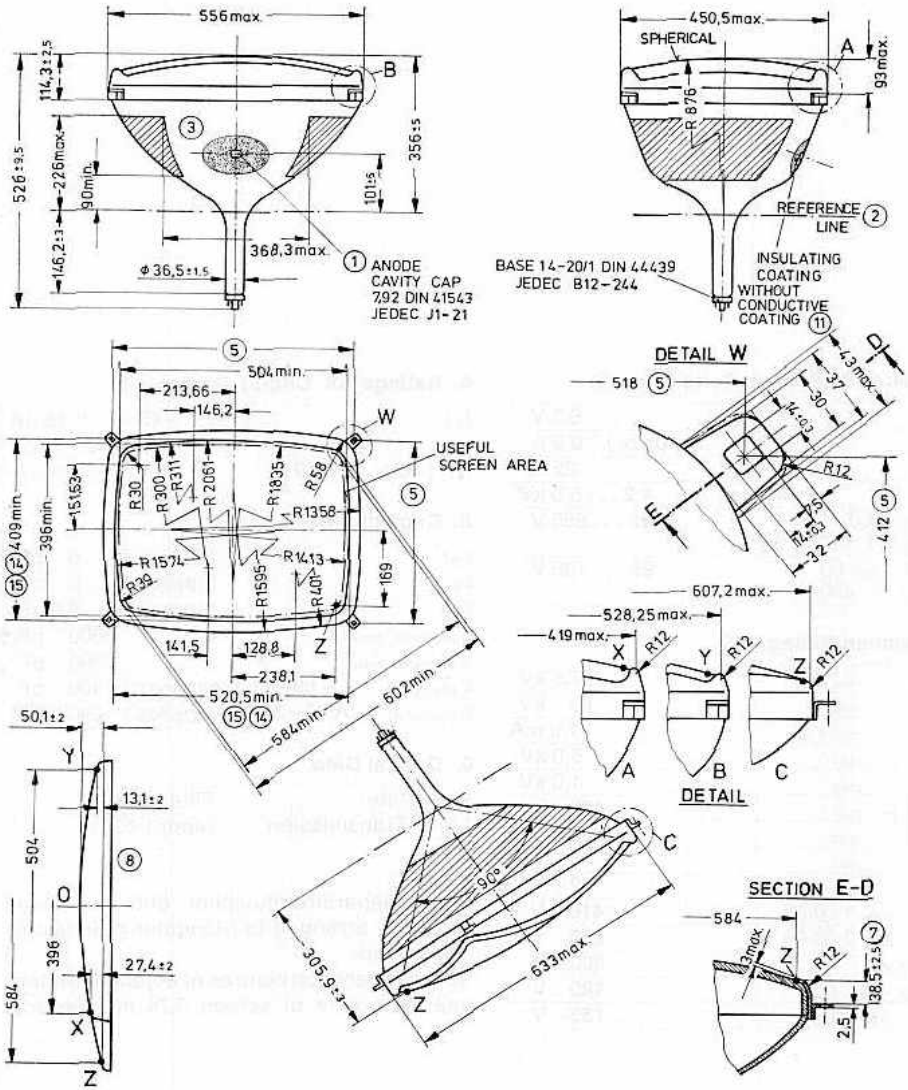

O Notes see pages 68 and 69

Reference line gauge see page 66

RELATIVE MOUNTING OF TYPICAL COMPONENTS

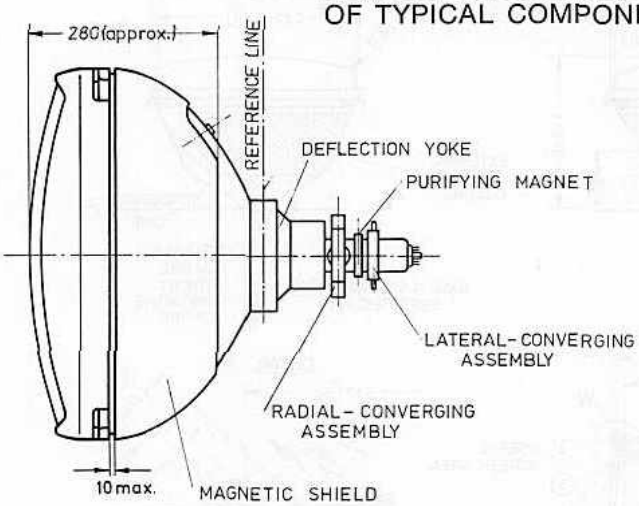

LOCATION OF RADIAL-CONVERGING POLE PIECES

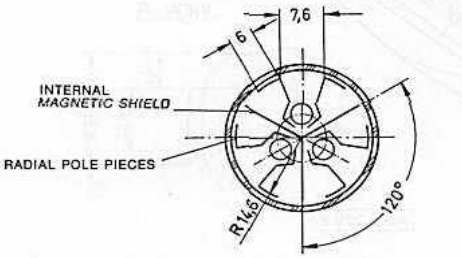

BOTTOM VIEW OF BASE

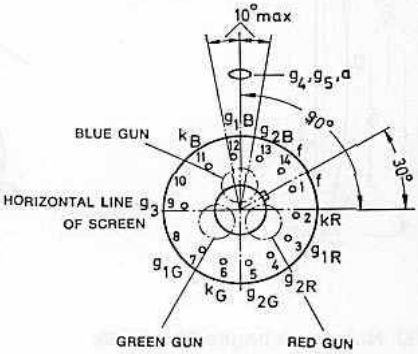

Colour Picture Tubes

A 63–200 X

For Replacement

Dimensional Drawings in mm

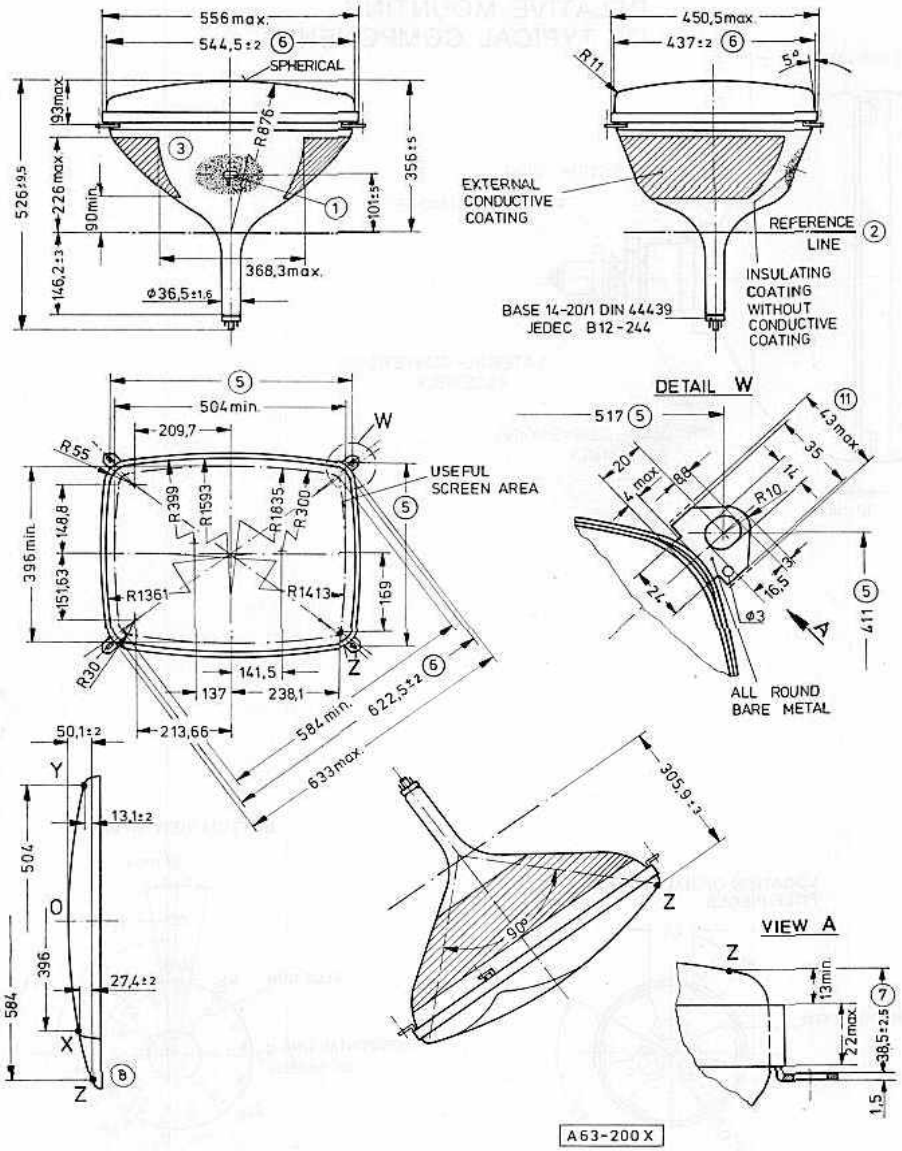

O Notes see pages 68 and 69

Reference line gauge see page 66

RELATIVE MOUNTING OF TYPICAL COMPONENTS

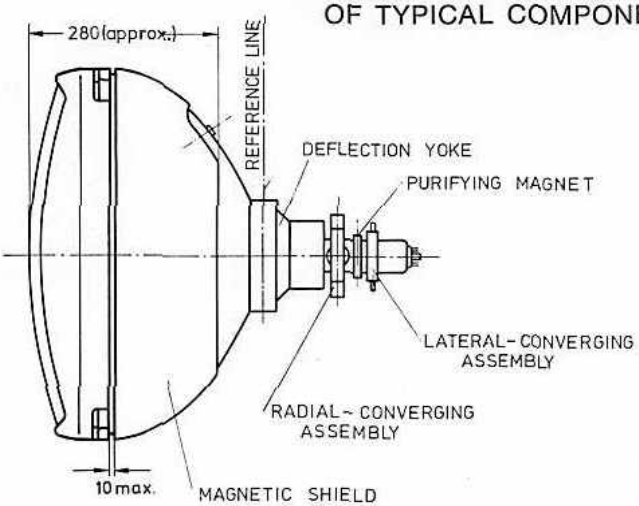

LOCATION OF RADIAL-CONVERGING POLE PIECES

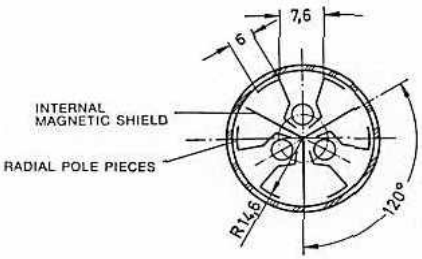
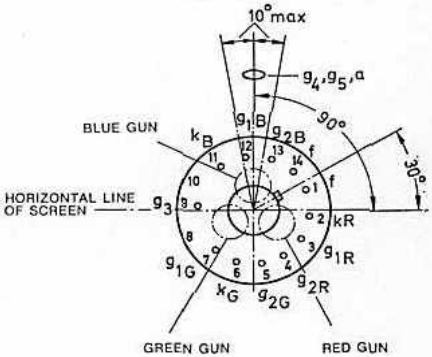
BOTTOM VIEW OF BASE