TELEVISION TUBE A47-14W

QUICK REFERENCE DATA		
47cm (19in) direct viewing television tube with metal backed screen. This tube is electrically identical to the A47-11W.		
Deflection	110	deg
Focusing	Electrostatic	
Light transmission (approx.)	50	%
Maximum overall length	30.9	cm

This data should be read in conjunction with GENERAL OPERATIONAL RECOMMENDATIONS - CATHODE RAY TUBES, which precede this section of the handbook.

HEATER

Suitable for series or parallel operation

V_h	6.3	V
I_h	300	mA

The limits of heater voltage and current are contained in 'General Operational Recommendations - Cathode Ray Tubes'.

Note - (applies to series operation only). The surge heater voltage must not exceed 9.5V r.m.s. when the supply is switched on. A current limiting device may be necessary in the circuit, to ensure that this voltage is not exceeded.

OPERATING CONDITIONS

V_{a2+a4}	20	20	kV
V_{a3} (focus electrode control range)	0 to 400	0 to 400	V
V_{a1}	400	500	V
V_g for visual extinction of focused raster	-40 to -77	-50 to -93	V
*V_k for visual extinction of focused raster	36 to 66	45 to 80	V

*For cathode modulation, all voltages are measured with respect to the grid.

SCREEN

Metal backed

Fluorescent colour	White	
Light transmission (approx.)	50	%
Useful screen area	see page D6	

FOCUSING

Electrostatic

The range of focus voltages shown in 'OPERATING CONDITIONS' results in optimum overall focus at a beam current of 250μA.

DEFLECTION

Double magnetic

The deflection coils should be designed so that their internal contour is in accordance with J.E.D.E.C. gauge 126, and should provide a pull-back of 4mm on a nominal tube.

CAPACITANCES

c_{g-all}	6.0	pF
c_{k-all}	4.0	pF
$c_{a2+a4-M}$	1000 to 1500	pF

EXTERNAL CONDUCTIVE COATING

This tube has an external conductive coating, M, which must be earthed, and the capacitance of this to the final anode is used to provide smoothing for the e.h.t. supply. The tube marking and warning labels are on the side of the cone opposite the final anode connector and this side should not be used for making contact to the external conductive coating.

RASTER CENTRING

See note under this heading in 'General Operational Recommendations - Cathode Ray Tubes'.

Centring magnet field intensity	0 to 10	Gs
Maximum distance of centre of centring field from reference line	57	mm

Adjustment of the centring magnet should not be such that a general reduction in brightness of the raster occurs.

REFERENCE LINE GAUGE

J.E.D.E.C. 126. For details see 'General Operational Recommendations - Cathode Ray Tubes'.

MOUNTING POSITION Any

The tube socket should not be rigidly mounted but should have flexible leads and be allowed to move freely. The bottom circumference of the base shell will fall within a circle of 40mm diameter which is centred upon the perpendicular from the centre of the face.

This tube is fitted with a pin protector in order to avoid damage to the glass base due to bending of the base pins whilst handling the tube.

It is advisable to keep this pin protector on the base until it can be replaced by the socket after installation of the tube in any equipment.

RATINGS (DESIGN CENTRE SYSTEM)

V_{a2+a4} max. (at $I_{a2+a4} = 0$) (see note 1)	20	kV
V_{a2+a4} min.	13	kV
$+V_{a3}$ max.	1.0	kV
$-V_{a3}$ max.	500	V
$+v_{a3(pk)}$ max. (see note 2)	2.5	kV
V_{a1} max.	700	V
V_{a1} min.	350	V
$-v_{g(pk)}$ max. (see note 2)	400	V
$-V_g$ max. (see note 3)	150	V
$\pm I_{a3}$ max.	25	μA
$\pm I_{a1}$ max.	5	μA
V_{h-k} (see note 4)		
Cathode positive		
d.c. max.	250	V
pk max.	300	V
Cathode negative		
d.c. max.	135	V
pk max.	180	V
R_{h-k} max.	1.0	MΩ
Z_{k-e} max. (f = 50c/s)	100	kΩ
R_{g-k} max.	1.5	MΩ
Z_{g-k} max. (f = 50c/s)	500	kΩ

1. Adequate precautions should be taken to ensure that the receiver is protected from damage which may be caused by a possible high voltage flashover within the cathode ray tube.

2. Maximum pulse duration 22% of one cycle with a maximum of 1.5ms.

3. The d.c. value of bias must not be such as to allow the grid to become positive with respect to the cathode, except during the period immediately after switching the receiver on or off when it may be allowed to rise to +2V.

   It is advisable to limit the positive excursion of the video signal to +5V(pk) max. This may be achieved automatically by the series connection of a 10kΩ resistor.

4. During an equipment warm-up period not exceeding 15 seconds $v_{h-k(pk)}$ max. (cathode positive) is allowed to rise to 410V. Between 15 and 45 seconds after switching on a decrease in $v_{h-k(pk)}$ max. (cathode positive) proportional with time from 410V to 250V is permissible.

WARNING

X-ray shielding is advisable to give protection against possible danger of personal injury arising from prolonged exposure at close range to this tube when operated above 20kV.

WEIGHT

Tube alone	7.0	kg
	15.4	lb

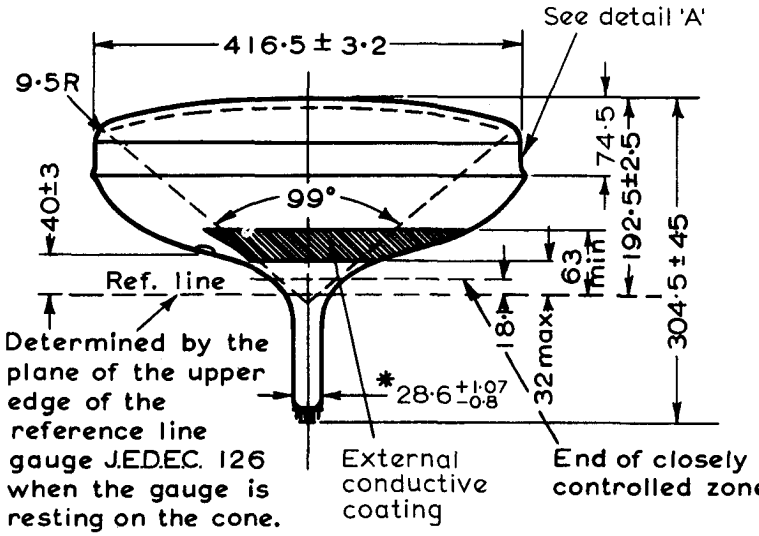

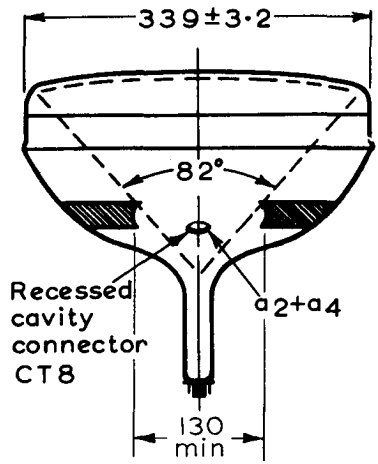

*The maximum value is determined by the reference line gauge

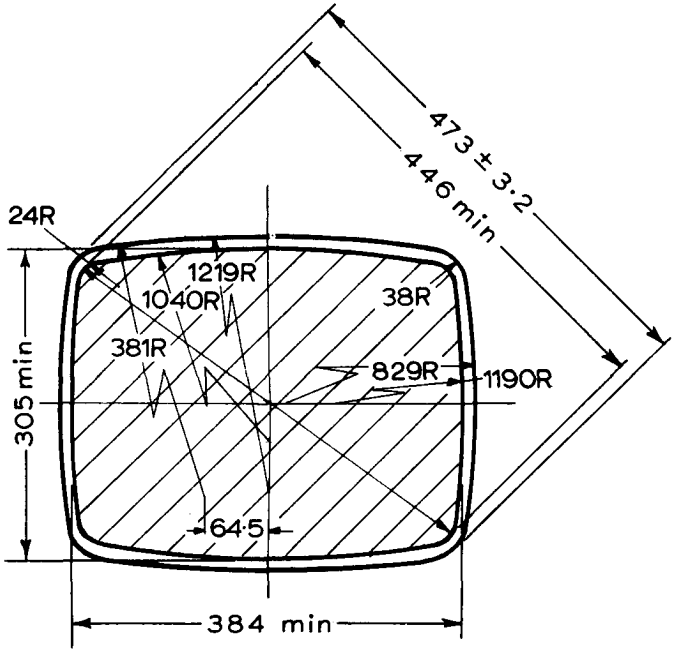

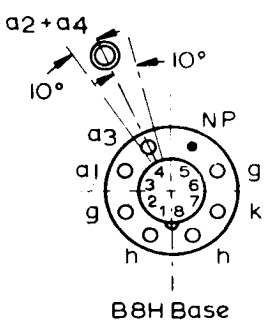

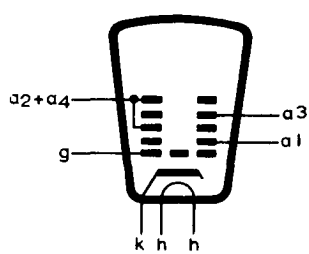

All dimensions in mm

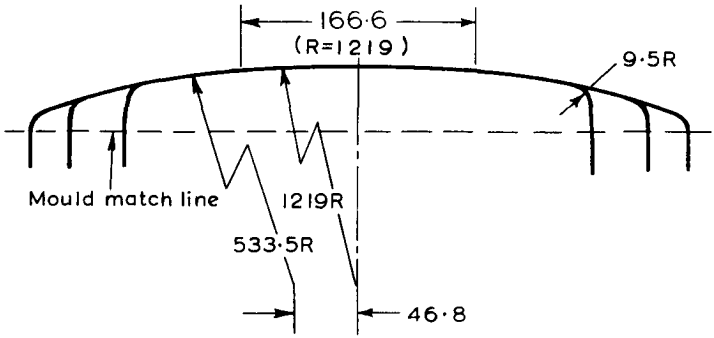

External screen radii

Detail 'A'

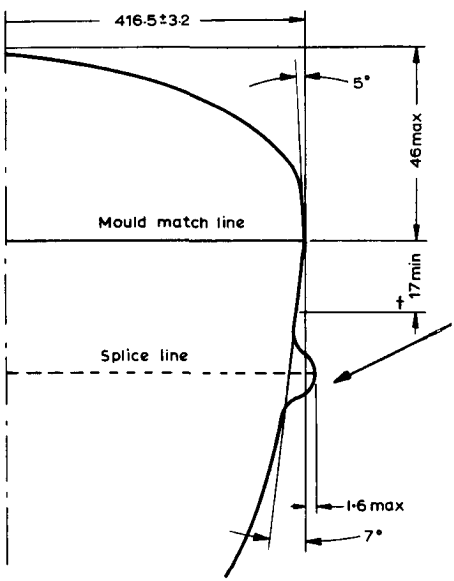

†Undisturbed area between mould match line and splice line

All dimensions in mm B5009

The bulge at the splice line seal may increase the indicated maximum values for envelope width, diagonal and height by not more than 3.2mm, but at any point around the seal, the bulge will not protrude more than 1.6mm beyond the envelope surface at the mould match line.

The mounting arrangement should be designed such that for satisfactory clamping it does not depend on the presence of a bulge at the splice line.

The undisturbed area between mould match line and splice line is 15mm minimum. This should be the width of the tube support band.

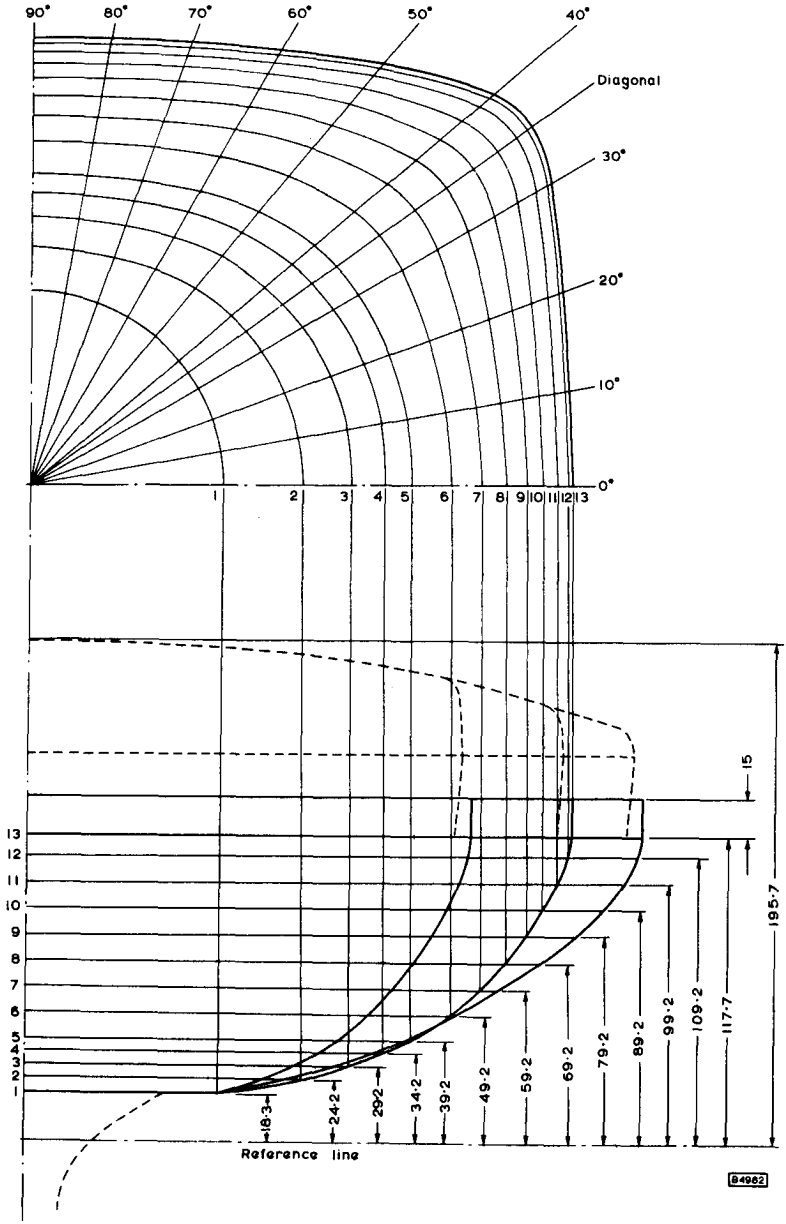

MAXIMUM CONE CONTOURS

DIMENSIONS FOR MAXIMUM CONE CONTOUR DRAWING (Page D8)

Section	Nominal height above Ref. line	0° long	10°	20°	30°	Diagonal	40°	50°	60°	70°	80°	90° short
1	18.3	75.0	75.0	75.0	75.0	75.0	75.0	75.0	75.0	75.0	75.0	75.0
2	24.2	106.1	105.6	105.6	103.8	102.7	101.6	99.1	96.2	93.7	92.4	92.4
3	29.2	125.3	125.7	124.6	122.3	120.6	118.9	115.1	111.0	106.7	104.2	103.9
4	34.2	138.2	138.9	137.8	136.0	134.3	132.3	127.5	121.8	117.0	113.7	113.0
5	39.2	148.6	149.0	148.5	147.7	146.3	144.2	138.0	131.3	125.2	121.6	120.6
6	49.2	164.5	164.6	165.2	167.3	166.8	164.6	156.0	146.8	139.0	134.5	133.1
7	59.2	176.5	176.6	178.7	183.4	184.0	181.4	170.2	158.9	149.8	144.6	142.9
8	69.2	186.3	186.5	190.3	197.0	198.9	195.8	182.3	169.0	158.9	152.8	151.1
9	79.2	194.2	195.0	200.2	209.1	212.0	208.6	192.5	177.5	166.2	159.8	157.9
10	89.2	200.7	202.1	208.4	219.6	223.5	219.7	200.4	184.2	172.3	165.8	163.4
11	99.2	206.0	208.0	215.0	227.9	232.8	228.6	206.6	189.2	176.9	170.0	167.9
12	109.2	210.0	212.3	219.6	233.0	238.1	233.9	210.9	193.2	180.5	173.6	171.3
13	117.7	212.2	214.6	221.8	234.9	240.5	236.0	213.1	195.1	182.6	175.7	173.5

All dimensions in mm.

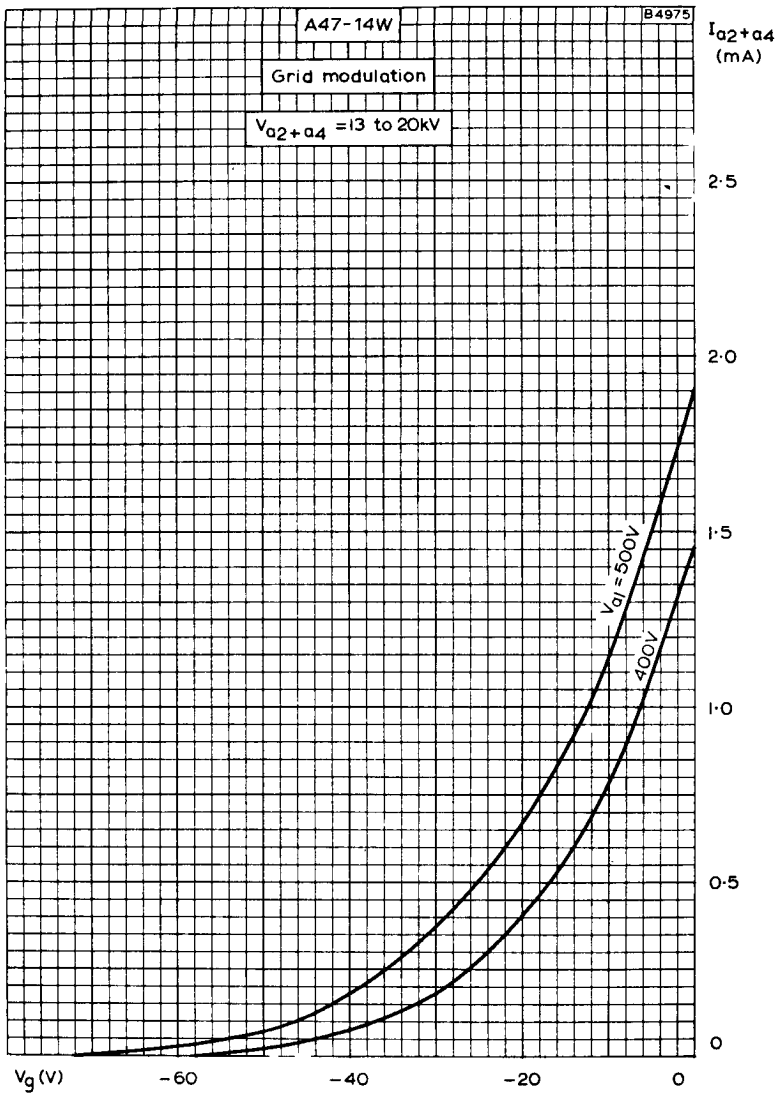

FINAL ANODE CURRENT PLOTTED AGAINST GRID VOLTAGE.
GRID MODULATION.

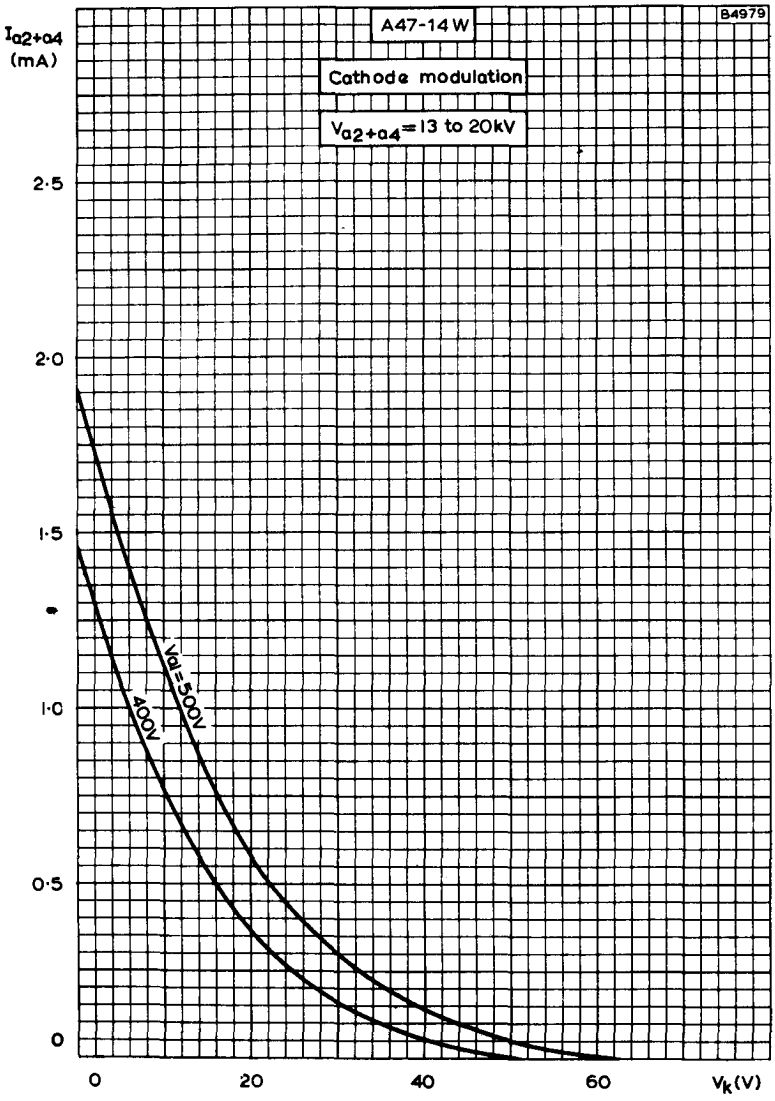

FINAL ANODE CURRENT PLOTTED AGAINST CATHODE-TO-GRID VOLTAGE. CATHODE MODULATION

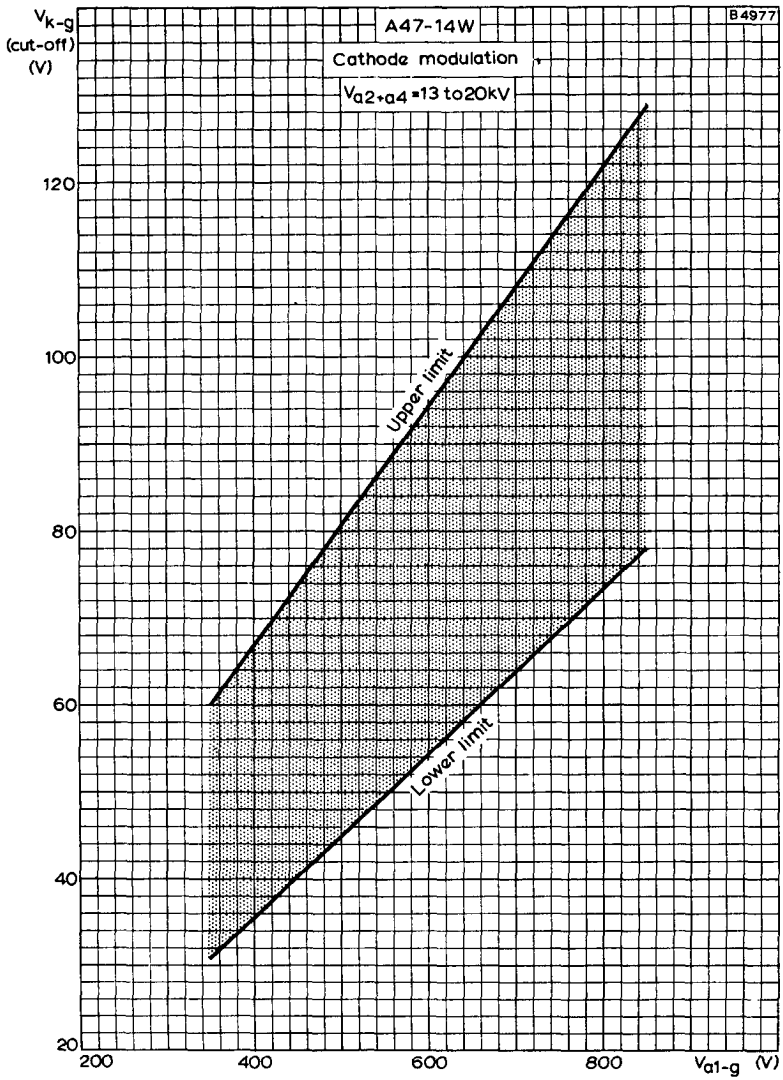

LIMITS OF CATHODE-TO-GRID CUT-OFF VOLTAGE PLOTTED AGAINST FIRST ANODE-TO-GRID VOLTAGE. CATHODE MODULATION

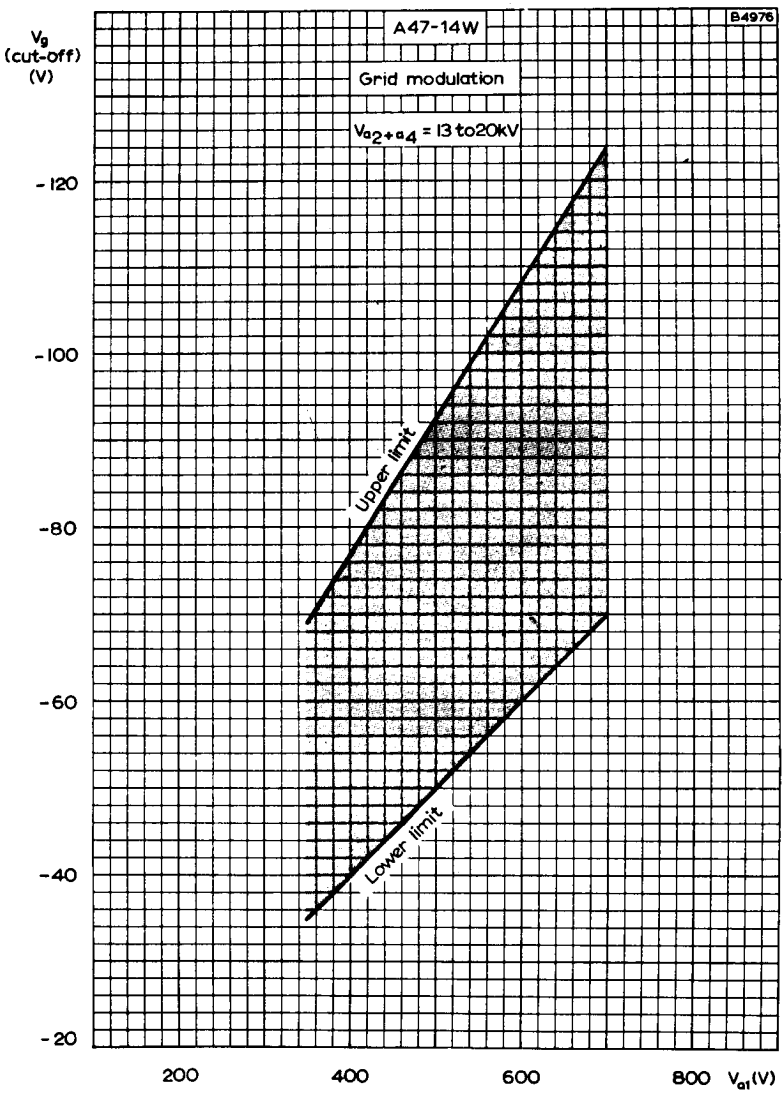

LIMITS OF GRID CUT-OFF VOLTAGE PLOTTED AGAINST FIRST ANODE VOLTAGE. GRID MODULATION