TELEVISION TUBE A44-120W/R

QUICK REFERENCE DATA		
44cm (17in) direct viewing television tube with metal backed screen and reinforced envelope. A separate safety screen is not required. Suitable for use in receivers with push-through presentation. This tube is fitted with a ring trap base.		
Deflection angle	110	deg
Focusing		Electrostatic
Light transmission	48	%
Maximum overall length	291	mm

This data should be read in conjunction with
GENERAL OPERATIONAL RECOMMENDATIONS-CATHODE RAY TUBES

HEATER

Suitable for series or parallel operation

V_h	6.3	V
I_h	300	mA

The limits of heater voltage and current are contained in 'General Operational Recommendations-Cathode Ray Tubes'.

Note:- (Applies to series operation only)

The surge heater voltage must not exceed 9.5V r.m.s. when the supply is switched on. A current limiting device may be necessary in the circuit, to ensure that this voltage is not exceeded.

OPERATING CONDITIONS

V_{a2+a4}	18	kV
V_{a3} (focus electrode control range)	0 to 400	V
V_{a1}	400	V
V_g for visual extinction of focused raster	-40 to -77	V
*V_k for visual extinction of focused raster	36 to 66	V

*For cathode modulation, all voltages are measured with respect to the grid.

SCREEN (Metal backed)

Fluorescent colour		White
Light transmission	48	%
Useful screen area		See page 6

FOCUSING (Electrostatic)

The range of focus voltage shown in 'Operating Conditions' results in optimum overall focus at a beam current of 250μA.

DEFLECTION (Magnetic)

Diagonal deflection angle	110	deg
Horizontal deflection angle	100	deg
Vertical deflection angle	83	deg

CAPACITANCES

$c_{g\text{-all}}$	7.0	pF
$c_{k\text{-all}}$	5.0	pF
$c_{a2+a4\text{-}M}$	700 to 1300	pF
$c_{a2+a4\text{-}B}$	200	pF

EXTERNAL CONDUCTIVE COATING

This tube has an external conductive coating, M, which must be connected to chassis, and the capacitance of this coating to the final anode is used to provide smoothing for the e.h.t. supply. The electrical connection to this coating must be made within the area specified on the tube outline drawing.

RING TRAP

For flashover protection to the receiver, parallel spark gaps are included for all the pins in the base of this tube, and the common connection is made to pin 5. These spark gaps are intended as part of a system for full flashover protection. A direct connection must always be made from pin 5 to the external conductive coating. Any electrode supplied directly from a high energy source (such as the H.T. line) should be provided with a series resistor.

RASTER CENTRING

See note under this heading in 'General Operational Recommendations-Cathode Ray Tubes'.

Centring magnet field intensity	0 to 800	A/m
Maximum distance between centre of centring field and reference line	57	mm

Adjustment of the centring magnet should not be such that a general reduction in brightness of the raster occurs.

REFERENCE LINE GAUGE

J.E.D.E.C. 126. For details see 'General Operational Recommendations-Cathode Ray Tubes'.

MOUNTING POSITION

Any. The tube socket should not be rigidly mounted but should have flexible leads and be allowed to move freely. The bottom circumference of the base shell will fall within a circle of 40mm diameter which is centred on the perpendicular from the centre of the face.

This tube is fitted with a pin protector in order to avoid damage to the glass base due to bending of the base pins whilst handling the tube.

It is advisable to keep this pin protector on the base until it can be replaced by the socket after installation of the tube in any equipment.

RATINGS (DESIGN CENTRE SYSTEM)

V_{a2+a4} max. (at $I_{a2+a4} = 0$) (see note 1)	18	kV
V_{a2+a4} *min.*	13	kV
$+V_{a3}$ max.	1.0	kV
$-V_{a3}$ max.	500	V
V_{a1} max.	700	V
V_{a1} min.	350	V
$-v_{g(pk)}$ max. (see note 2)	400	V
$-V_g$ max. (see note 3)	150	V
$\pm I_{a3}$ max.	25	μA
$\pm I_{a1}$ max.	5	μA
V_{h-k} (see note 4)		
Cathode positive		
d.c. max.	250	V
pk max.	300	V
Cathode negative		
d.c. max.	135	V
pk max.	180	V
R_{h-k} max.	1.0	MΩ
Z_{k-e} max. (f=50Hz)	100	kΩ
R_{g-k} max.	1.5	MΩ
Z_{g-k} max. (f=50Hz)	500	kΩ

NOTES

1. Adequate precautions should be taken to ensure that the receiver is protected from damage which may be caused by a possible high voltage flashover within the cathode ray tube.

2. Maximum pulse duration 22% of one cycle with a maximum of 1.5ms.

3. The d.c. value of bias must not be such as to allow the grid to become positive with respect to the cathode, except during the period immediately after switching the receiver on or off when it may be allowed to rise to +2V.

   It is advisable to limit the positive excursion of the video signal to + 5V(pk) max. This may be achieved automatically by the series connection of a 10kΩ resistor.

4. During an equipment warm-up period not exceeding 15 seconds, $v_{h-k(pk)}$ max. (cathode positive) is allowed to rise to 410V. Between 15 and 45 seconds after switching on, a decrease in $v_{h-k(pk)}$ max. (cathode positive) proportional with time from 410V to 250V is permissible.

5. The metal band (B) should be connected directly to the chassis in an a.c. receiver operating from an isolating transformer, or via a suitable leakage path in an a.c./d.c. receiver, for example 2.0MΩ.

   The mounting lugs will be in electrical contact with the metal band.

WARNING

X-ray shielding is advisable to give protection against possible danger of personal injury arising from prolonged exposure at close range to this tube when operated above 18kV.

WEIGHT

Tube alone (approx.)	5.5	kg

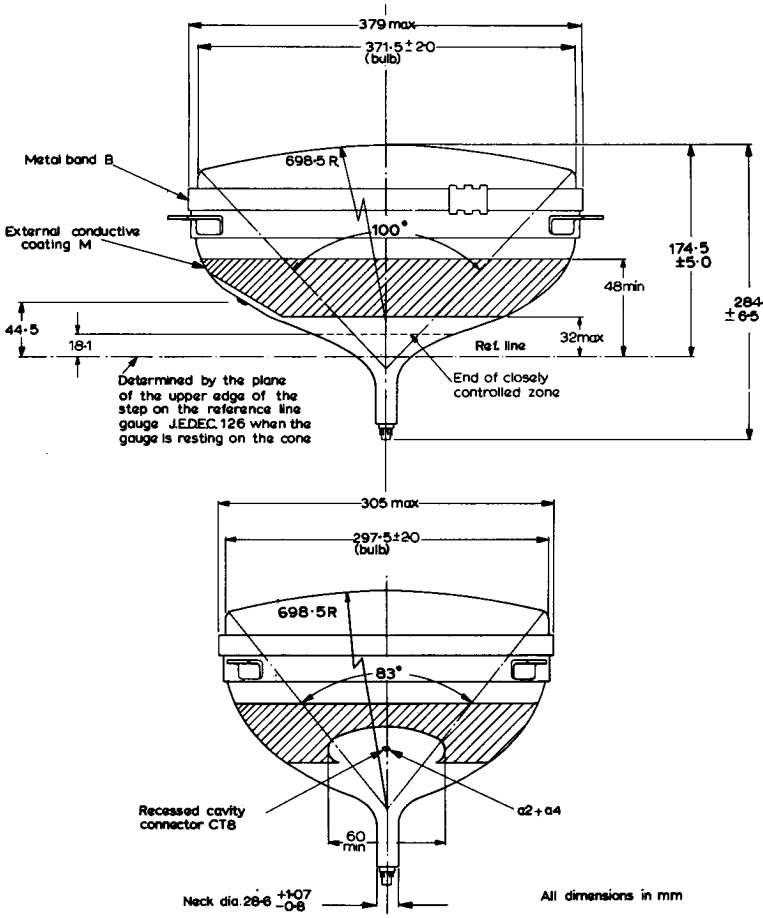
379 max
371·5 ± 2·0
(bulb)
Metal band B
698·5 R
100°
External conductive coating M
174·5 ±5·0
48 min
284·5 ±6·5
44·5
18·1
32 max
Ref. line
Determined by the plane of the upper edge of the step on the reference line gauge J.E.D.E.C. 126 when the gauge is resting on the cone
End of closely controlled zone
305 max
297·5 ±2·0
(bulb)
698·5 R
83°
Recessed cavity connector CT8
a2 + a4
60 min
Neck dia. 28·6 +1·07 −0·8
All dimensions in mm

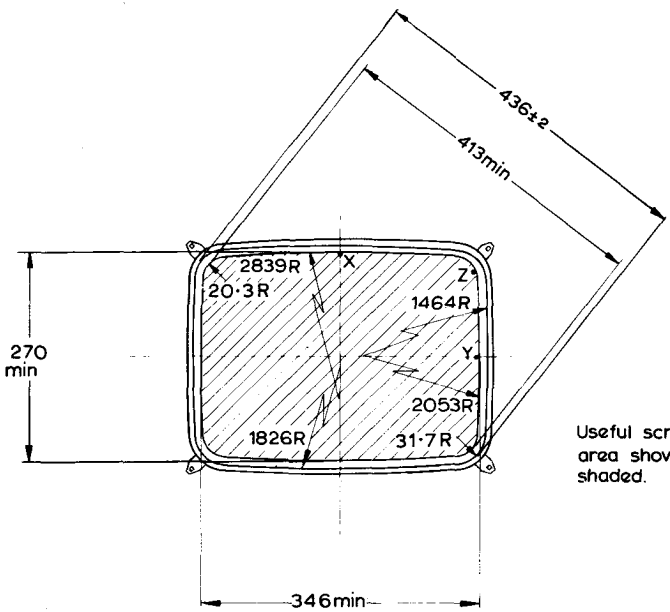

Useful screen area shown shaded.

Bulb dimensions

All dimensions in mm

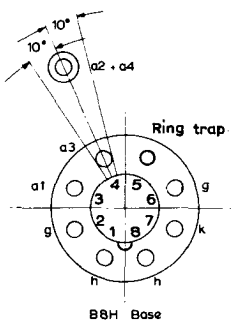

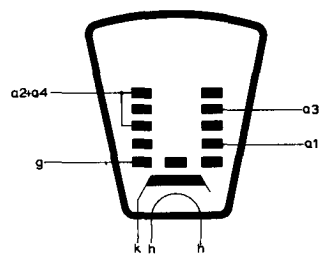

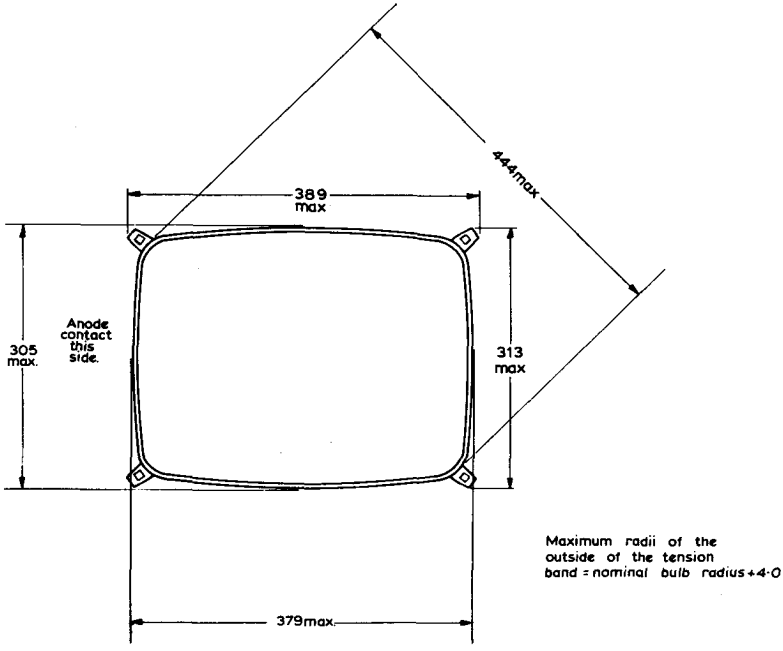
444max
389
max
305
max.
Anode
contact
this
side.
313
max
379max.
Maximum radii of the
outside of the tension
band = nominal bulb radius + 4·0

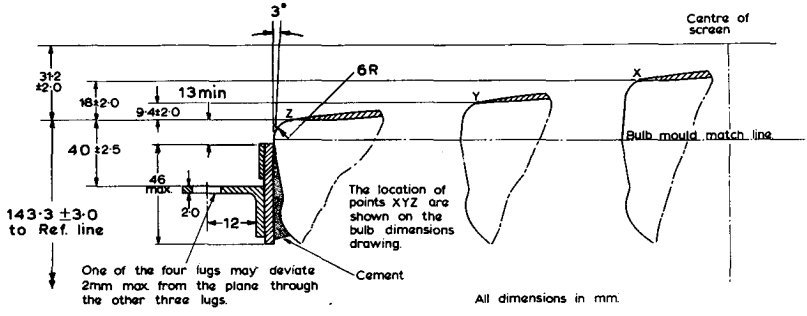
3°
Centre of
screen
31·2
±2·0
6R
13min
18±2·0
9·4±2·0
Z
Y
X
Bulb mould match line
40±2·5
46
max.
2·0
12
143·3 ±3·0
to Ref. line
The location of
points XYZ are
shown on the
bulb dimensions
drawing.
One of the four lugs may deviate
2mm max from the plane through
the other three lugs.
Cement
All dimensions in mm.

MAXIMUM CONE CONTOURS

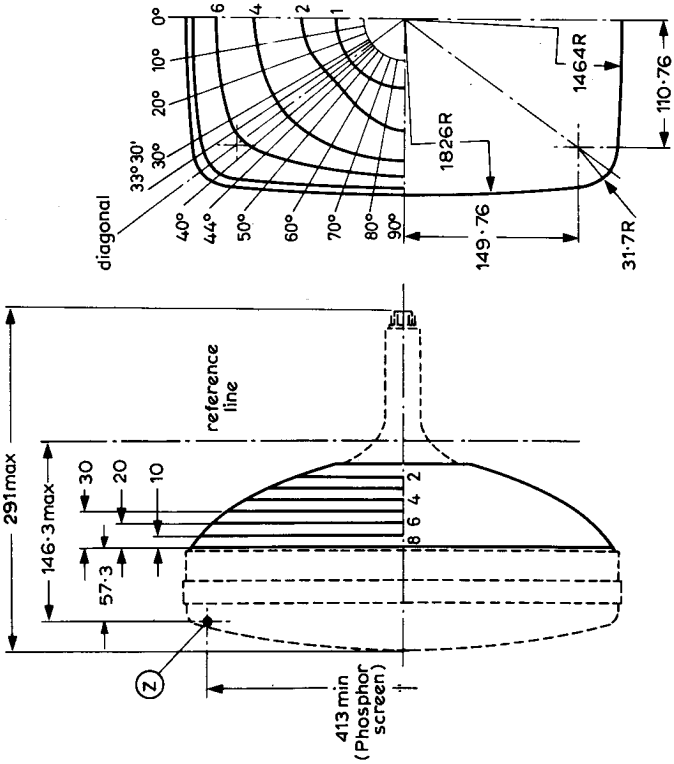

DIMENSIONS FOR MAXIMUM CONE CONTOUR DRAWING (Page 8)

Section	Nominal distance from point "Z"	Distance from centre (max. values)												
		0° Long axis	10°	20°	30°	33°30'	36°30' Diagonal	40°	44°	50°	60°	70°	80°	90° Short axis
1	128	60.0	60.0	60.0	60.0	60.0	60.0	60.0	60.0	60.0	60.0	60.0	60.0	60.0
2	117.3	95.9	95.2	93.0	92.3	92.1	92.1	92.3	92.6	93.1	93.8	94.6	94.9	95.1
3	107.3	118.1	117.8	118.3	118.3	118.6	119.2	117.8	117.7	117.2	115.5	113.3	111.2	109.8
4	97.3	135.0	136.1	138.3	139.9	141.0	141.6	141.1	138.5	135.4	130.5	125.6	121.8	120.8
5	87.3	149.5	151.1	155.1	159.1	161.3	162.0	161.5	157.5	151.0	142.0	135.8	130.8	129.5
6	77.3	162.5	164.0	168.8	176.0	179.0	179.5	178.0	173.5	163.4	150.8	143.3	138.3	136.4
7	67.3	172.5	174.4	180.1	190.0	194.1	196.3	194.9	186.8	174.5	159.1	149.3	143.9	141.7
8	57.3	179.7	183.1	189.3	201.1	207.4	210.9	206.1	196.0	182.8	165.5	154.0	147.9	145.6

All dimensions in millimetres

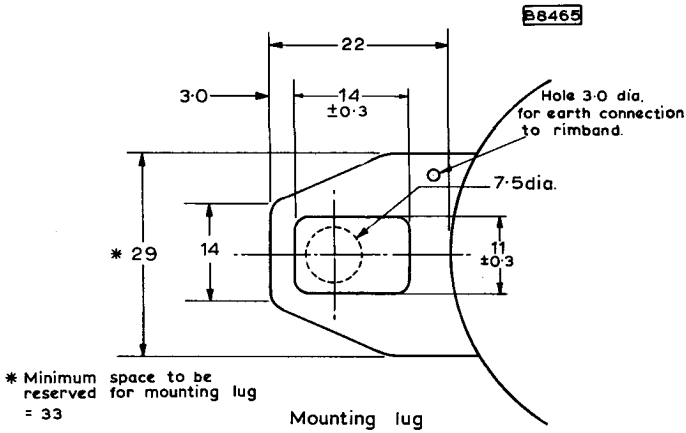

Mounting lug

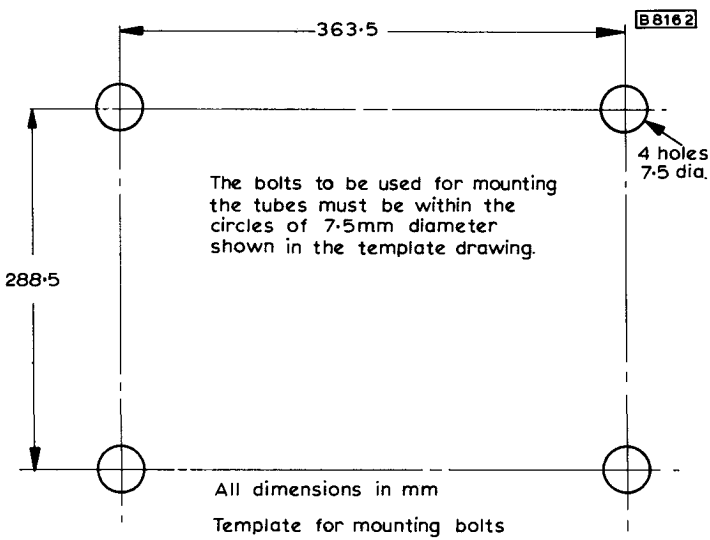

Template for mounting bolts

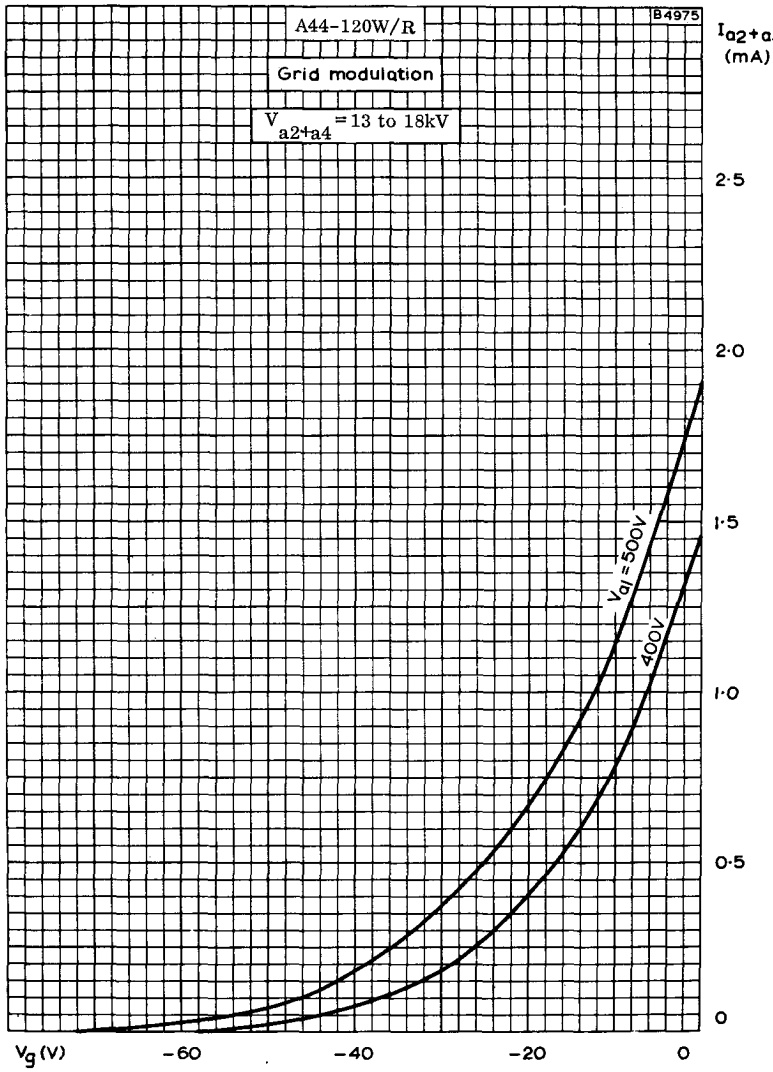

FINAL ANODE CURRENT PLOTTED AGAINST GRID VOLTAGE.
GRID MODULATION

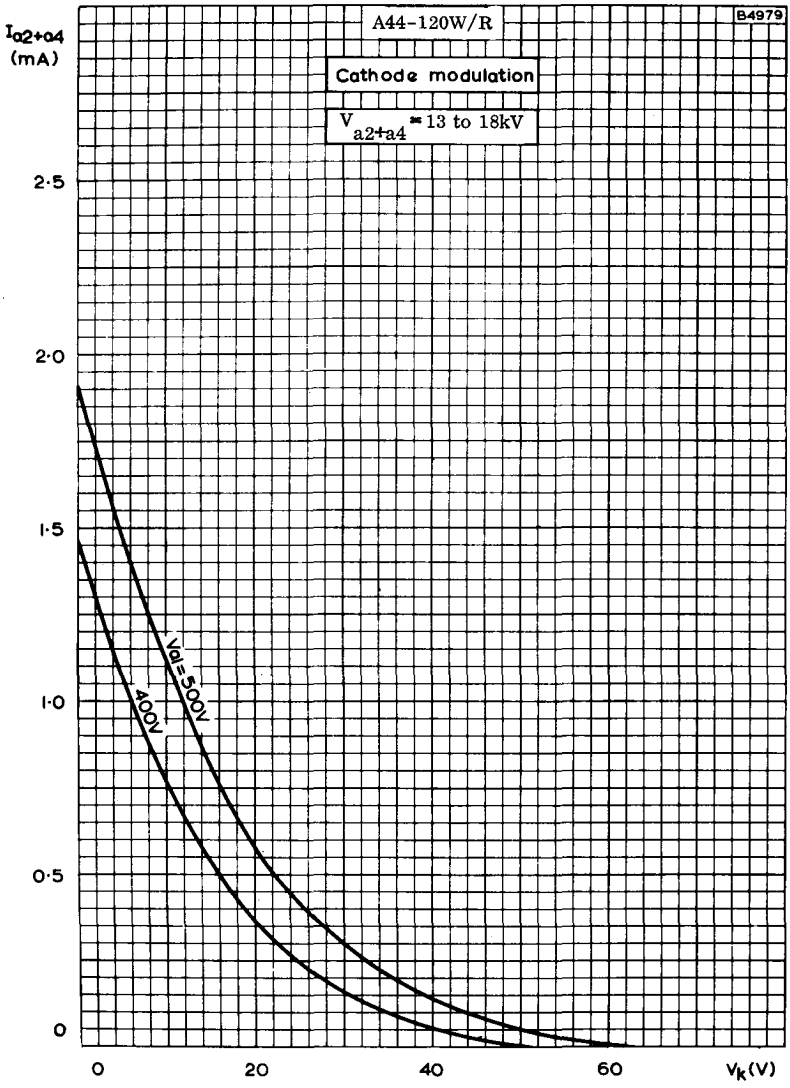

FINAL ANODE CURRENT PLOTTED AGAINST CATHODE-TO-GRID VOLTAGE
CATHODE MODULATION

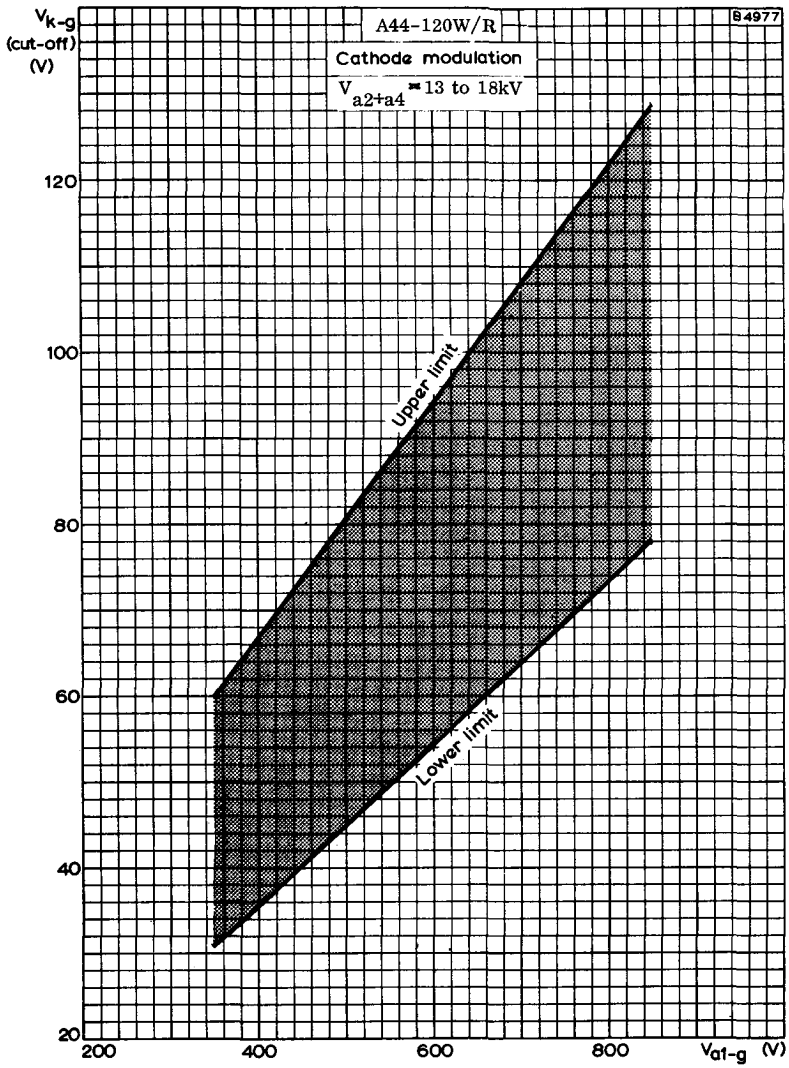

LIMITS OF CATHODE-TO-GRID CUT-OFF VOLTAGE PLOTTED AGAINST FIRST ANODE-TO-GRID VOLTAGE.
CATHODE MODULATION

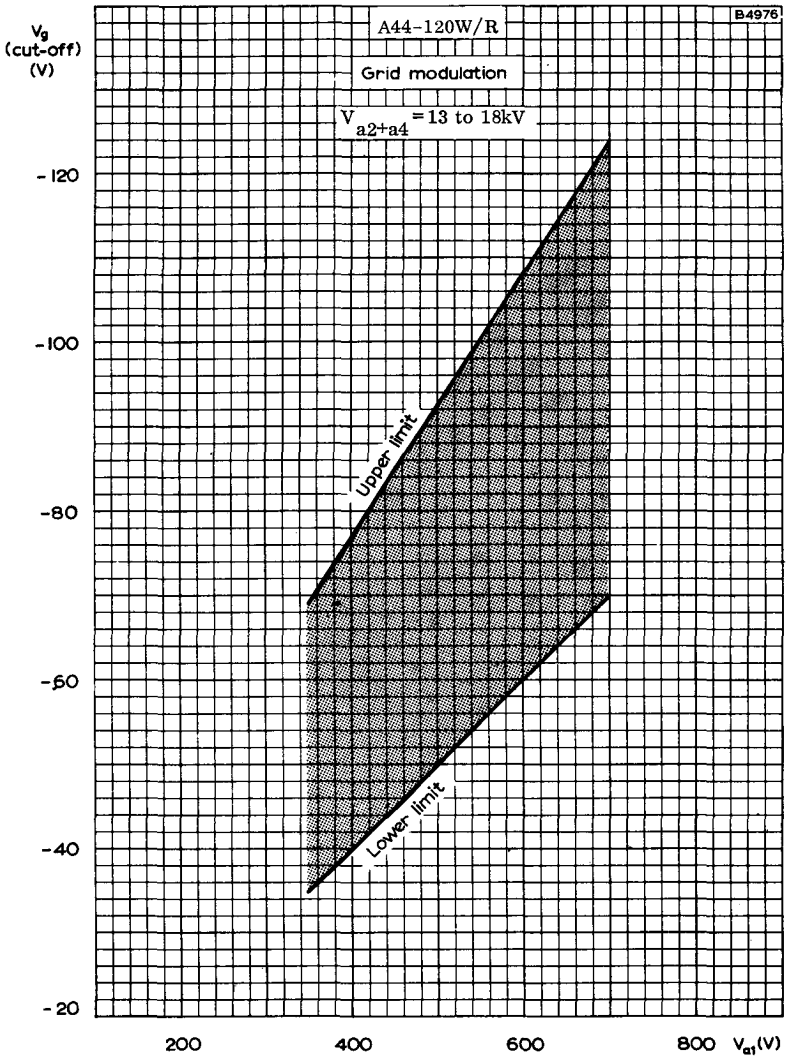

LIMITS OF GRID CUT-OFF VOLTAGE PLOTTED AGAINST FIRST ANODE VOLTAGE. GRID MODULATION