A292

HIGH VACUUM RECTIFIER

Service Type CV5998

ABRIDGED DATA

External-anode rectifier for charging diode or overswing diode service in high power pulse modulators.

Peak inverse anode voltage	40	kV max
Peak anode current	75	A max
Mean anode current	1.5	A max

GENERAL

Electrical

Cathode	indirectly heated	
Heater voltage	12	V
Heater current	14 ± 1	A

Mechanical

Overall length	16.250 inches (412.8mm) max
Overall diameter	2.133 inches (54.18mm) max
Net weight	5¼ pounds (2.4kg) approx
Mounting position	any
Cooling (see note 1)	water or forced-air

MAXIMUM AND MINIMUM RATINGS (Absolute values)

	Min	Max	
Heater voltage	11.4	12.6	V
Heater starting current (peak)	–	40	A
Cathode pre-heating time	6.0	–	min
Peak inverse anode voltage (see note 2)	–	40	kV
Anode current:			
peak (see note 3)	–	75	A
mean (see note 4)	–	1.5	A
Anode dissipation (see note 1)	–	2.0	kW
Anode temperature (see note 5)	–	150	°C
Cathode terminal temperature (see note 5)	–	150	°C

NOTES

1. The anode must be fitted in a cooling cylinder as described on page 4.
2. The cathode terminal must be fitted with a corona shield as described on page 4.
3. For overswing diode service.
4. For charging diode service.
5. Measured at the point specified on page 4.

OUTLINE (All dimensions without limits are nominal)

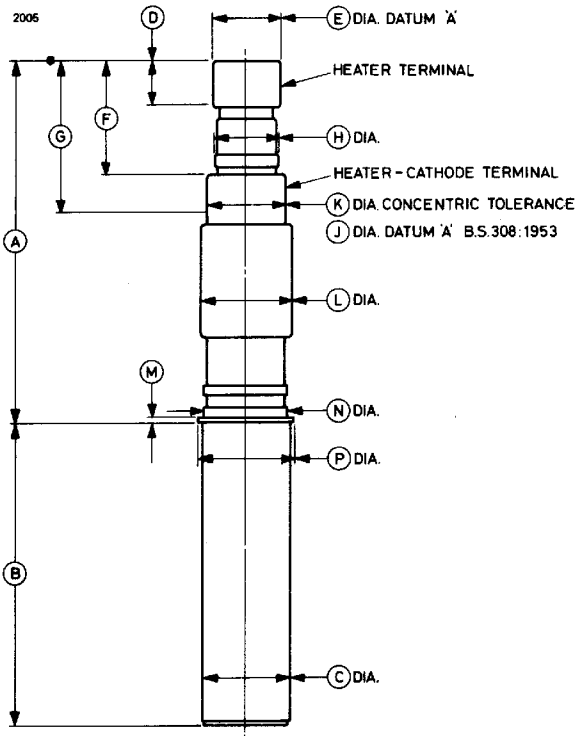

Ref	Inches	Millimetres	Ref	Inches	Millimetres
A	9.500 max	241.3 max	H	1.550 max	39.37 max
B	6.750 max	171.5 max	J	0.050	1.27
C	1.946 max	49.43 max	K	1.750	44.45
D	0.375 min	9.53 min	L	1.937 max	49.20 max
E	1.500	38.10	M	0.125 ± 0.005	3.18 ± 0.13
F	3.063 max	77.80 max	N	1.820 max	46.23 max
G	3.563 min	90.50 min	P	2.125 ± 0.008	53.98 ± 0.20

Millimetre dimensions have been derived from inches.

COOLING CYLINDER AND CORONA SHIELD
(All dimensions without limits are nominal)

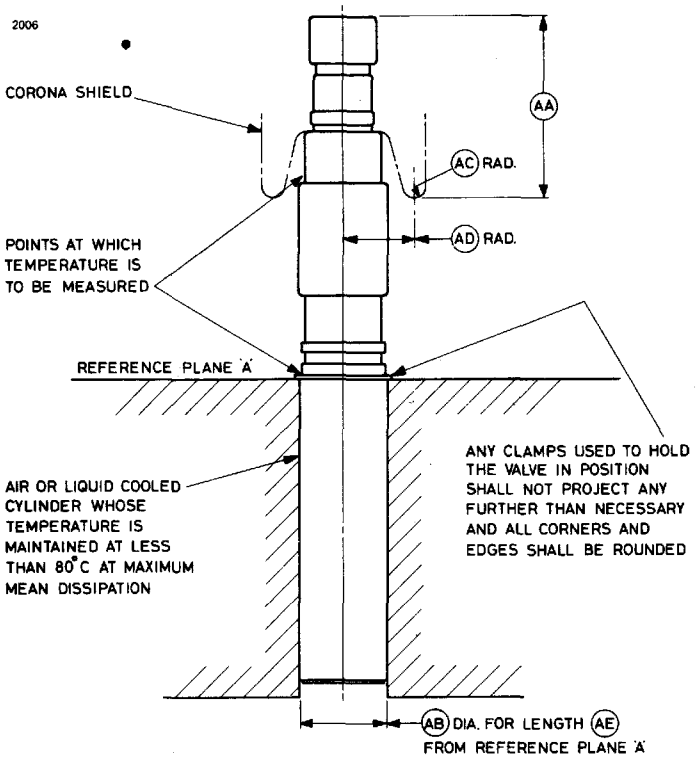

Ref	Inches	Millimetres
AA	4.000	101.6
AB	1.950 max 1.948 min	49.53 max 49.48 min
AC	0.250 min	6.35 min
AD	1.250 min	31.75 min
AE	6.750	171.5

Millimetre dimensions have been derived from inches.