Black and White Picture Tubes

AW 17–69 and A 17–69 . .

For Replacement

17 cm rectangular picture tube, aluminized screen, for industrial television

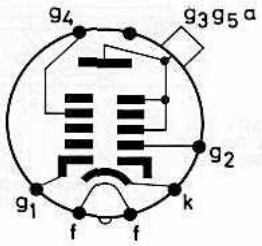

Electron Gun	Tetrode with Einzel-Lens
Bulb	All-Glass Type
Base	Duodecal DIN 41536 with 7 Pins
Focusing Method	Electrostatic
Deflection Method	Magnetic
Deflection Angles	Diagonal 70° Horizontal 60° Vertical 50°
Neck Diameter	36,5 mm
Face Shape	Flat
Material	Clear Glass
Screen	Phosphor P4 Aluminized
Minimum Useful Dimensions	96 x 126 mm Diagonal 155 mm
Overall Length	256 ± 10 mm
Weight	0,7 kg (approx.)

1. Generalities

Type	Fluorescence Colour	Persistence	
AW 17–69	Whitish	Medium	$10^{-3} \ldots 10^{-1}$ s
A 17–69 BE	*Blue*	*Medium Short*	*$10^{-5} \ldots 10^{-3}$ s*
A 17–69 GJ	Yellowish-Green	Medium	$10^{-3} \ldots 10^{-1}$ s
A 17–69 GM	Purplish-Blue	Long	$10^{-1} \ldots 1$ s
A 17–69 LF	Orange	Long	$10^{-1} \ldots 1$ s

2. Typical Operating Conditions

U_f ②		6,3 V
I_f		0,3 ± 6% A
U_{g3g5a}		14 kV
U_{g2}	300	400 V
U_{g4} ⑤	0 . . . 400	0 . . . 400 V
$(-U_{g1})$ cutoff ④	35 . . . 75	48 . . . 102 V

3. Maximum Ratings

$U_{g3g5a\ max}$ ⑤	16 kV
$U_{g3g5a\ min}$ ⑥	12 kV
$U_{g4\ max}$	460 V
$U_{g2\ max}$	460 V
$U_{g2\ min}$	200 V
$U_{g1\ max}$	0 V
$(-U_{g1})_{max}$	150 V
$U_{g1\ p\ max}$	2 V
$(-U_{g1})_{p\ max}$ ⑧	400 V
$P_{Im\ max}$	10 mW/cm²
$R_{g1\ max}$	1,0 MΩ
$Z_{g1\ max}$	0,5 MΩ
$R_{f/k\ max}$ ⑪	1,0 MΩ
$Z_{f/k\ max}$ ⑫	0,1 MΩ
$U_{-f/k\ max\ 1}$ ⑨ ⑩	410 V
$U_{-f/k\ max\ 2}$ ⑨ ⑩	250 V
$U_{-f/k\ p\ max}$	300 V
$U_{+f/k\ max}$	135 V
$U_{+f/k\ p\ max}$	180 V
$R_{g1\ min}$	150 Ω
$R_{g2\ min}$	470 Ω
$R_{g4\ min}$	470 Ω
$R_{g3g5a\ min}$	16 kΩ

4. Ratings for Circuit Design

I_{g2}	≤ ± 5 µA
I_{g4}	≤ ± 25 µA

5. Capacitances

c_{g1}	approx.	7 pF
c_k	approx.	5 pF
$c_{g3g5a/m\ min}$		400 pF
$c_{g3g5a/m\ max}$		800 pF

***Dimensional Drawings** in mm*

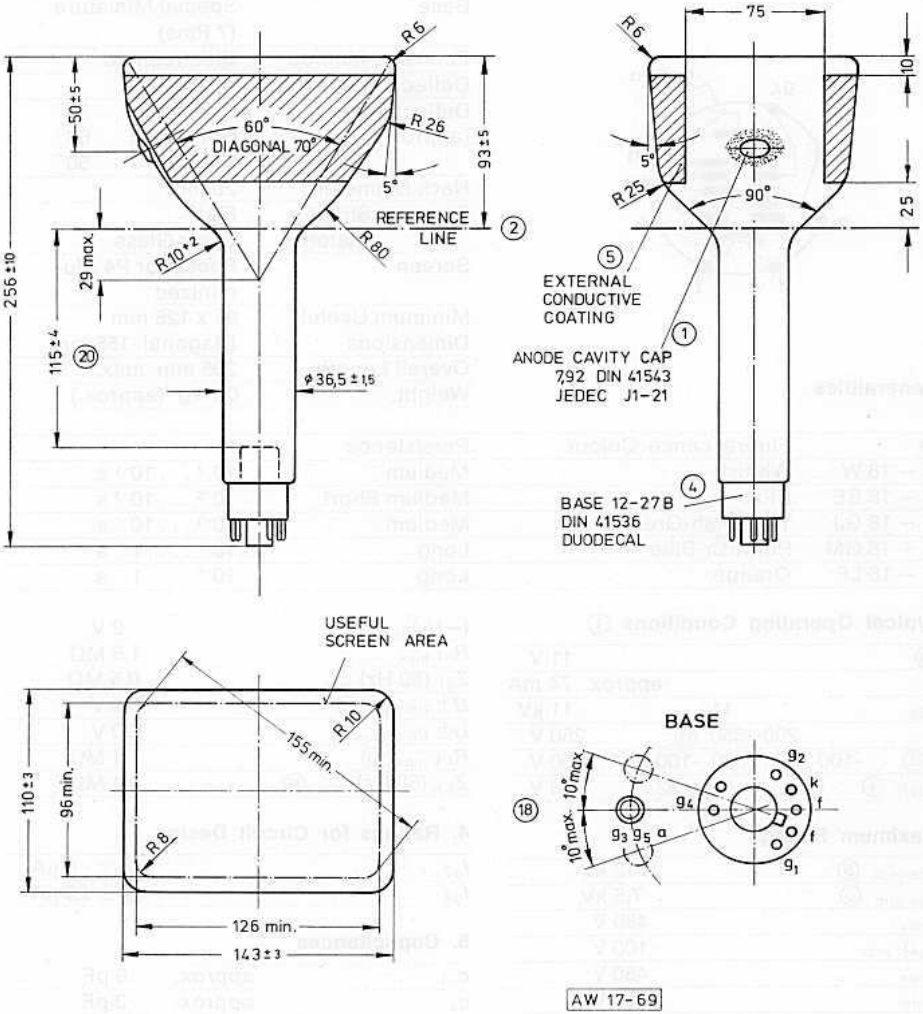

O Notes see pages 8 and 9

Reference line gauge see page 10