Ferranti

CATHODE RAY TUBE

A 9-inch diameter Triode Tube which has a high quality flat face with ground internal and external surfaces.

Primarily designed for use in Telerecording and in Television Transmission Systems Converters.

FOCUS	Magnetic
DEFLECTION	Magneti
SCREEN	Metal Backed
Phosphor	Type 'D'
Fluorescence	Green
Persistence	Short

Other phosphors are available such as Type 'A' (Green) or 'Q' (Violet) for Flying Spot Scanner applications or Type 'P' (Blue) for Photographic Recording.

For further details, refer to the relevant phosphor characteristics at the front of this section of the handbook.

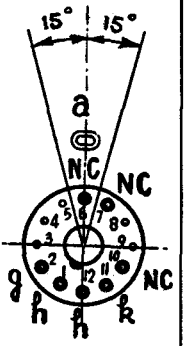

PHYSICAL DETAILS.

Base	B12A (Duodecal)
Anode Cap	CT8 (Cavity Type)
Max. Overall Length	595 mm
Max. Diameter	236 mm
Useful Screen Area	200 mm dia
Nom. Neck Diameter	35 mm

For other dimensions see drawing overleaf.

BASE CONNECTIONS.

Pin 1—Heater	Pin 7—Not connected
Pin 2—Grid	Pin 8—No pin
Pin 3—No pin	Pin 9—No pin
Pin 4—No pin	Pin 10—Not connected
Pin 5—No pin	Pin 11—Cathode
Pin 6—Not connected	Pin 12—Heater

Side Contact—Anode

HEATER.

Heater Voltage	6·3 volts
Heater Current	0·3 amp

RATINGS.

Max. Anode Voltage	30 kV
Nom. V_g for visual cut-off ...	Va/120
Max. V_{hk} (Heater Negative) ...	200 volts
Max. V_{hk} (Heater Positive) ...	200 volts

TYPICAL OPERATION.

Heater Voltage	6·3 volts
Anode Voltage	25 kV
Vg for visual cut-off	−210 volts
Grid Drive for $I_B = 100\mu A$ ...	35 volts
Screen Resolution at 50 f.p.s. ...	1000 lines
†Focus Coil	570 amp turns (aprox)

X-RAY WARNING.

When operated at an anode voltage in excess of 16 kV shielding may be required to protect against harmful X-ray radiation which could cause possible injury from prolonged exposure.

CAPACITANCE.

C_k–all	<8 pF
C_g–all	<8 pF

†Ferranti Focus Coil units Type FC.4 or FC.5 are available.

Issue 2
Nov., 1962

Ferranti

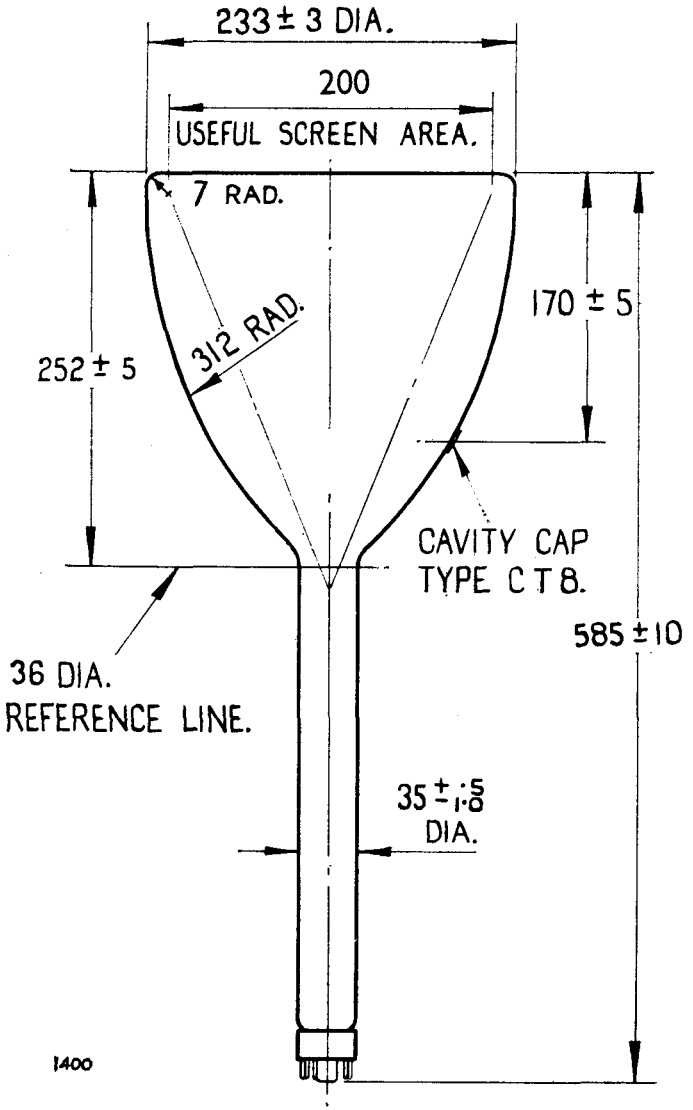

Dimensions in millimetres

FERRANTI LIMITED, GEM MILL, CHADDERTON, OLDHAM, LANCS.