8T39

Vapour Cooled Triode

The NEC 8T39 is a vapour cooled triode with a maximum plate dissipation rating of 10 kW. The tube is a vapour cooled version of the NEC 8T33, water cooled triode. Electrical characteristics of the NEC 8T39 are similar with those of the 8T33.

Due to its high transconductance, high output with high fficiency is easily obtainable at relatively low plate voltage. The ring-sealed grid terminal provides a low lead inductance which assures stable operation at high frequencies. The tube is designed for use as an amplifier, modulator or oscillator in AM broadcast transmitter and in industrial heating services. Maximum ratings apply at frequencies up to 30 Mc/s.

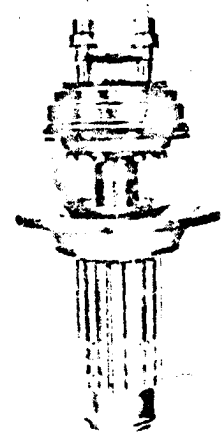

Electrical Data:

General Data:

Filament: Thoriated Tungsten

Voltage	7.5 volts
Current	60 amps
Maximum Starting Current	120 amps
Minimum Heating Time	5 sec
(Time interval between the instant of application of filament voltage and that of plate voltage)	
Transconductance	18 millimhos
(at Eb=5000 volts, Ib=1.0 amp)	
Amplification Factor	40
Direct Interelectrode Capacitances:	
Grid to Plate	26 μμF
Grid to Filament	49 μμF
Plate to Filament	0.7 μμF

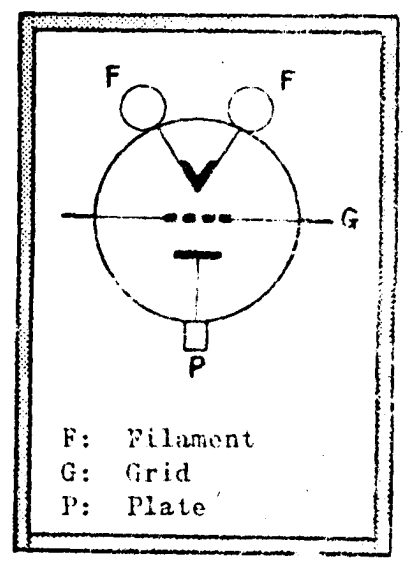

TERMINAL CONNECTIONS

8T39

Mechanical Data:

Dimensions:

Maximum Diameter ..... 162 mm

Maximum Overall Length ..... 375 mm

Net weight (approx.) ..... 3.5 kg

Mounting position: Vertical, anode down

Cooling:

To plate: vapour-cooling required

To stem and glass bulb: forced-air flow required (Note 1, 3)

Minimum air flow (Note 2) ..... 0.4 m^3/min

Maximum bulb temperature ..... 180°C

Maximum seal temperature ..... 180°C

Accessories Required:

iler ..... NEC VB506

Vapour condenser ..... NEC VB602

Water level controller ..... NEC VB550

Insulator pipe (steam outlet) ..... NEC VB704

Insulator pipe (condensed water inlet) ..... NEC VB701

Pressure equalizer ..... NEC VB752

Rubber joint between steam piping and insulator pipe ..... NEC VB782

L-joint between insulator pipe (condensed water inlet) and boiler .... NEC VB740

Joint between insulator pipe (condensed water inlet) and copper tube .. NEC VB742

Adapter for steam inlet of condenser ..... NEC VB762

Adapter for condensed water outlet of condenser ..... NEC VB766

Adapter for drain valve ..... NEC VB746

Gasket for steam outlet of boiler ..... NEC VB773

Gasket for condensed water inlet of boiler ..... NEC VB770

Steam piping ..... 2 inch, type M copper tube

Condensed water piping ..... 3/4 inch, type M copper tube

Filament connector (2 required) ..... NEC VT403

Grid connector ..... NEC VT305

Note 1. The specified air flow should be directed vertically from a nozzle of approx. 35 mm diameter into center of the filament terminals.

Note 2. Adequate forced-air flow is required to limit the temperature of the seals and bulb below their specified maximum values.

The amount of air-flow required will increase with the operating frequency.

Note 3. Start forced-air flow for each portion of the tube prior to the application of filament voltage.
Continue air flow at least 3 minutes after removal of all voltages.

AF Power Amplifier and Modulator-Class B

Maximum Ratings: Absolute Values

DC Plate Voltage	10000 volts
Max. Signal DC Plate Current (Note 4)	2.5 amps
Max. Signal Plate Input (Note 4)	25 kW
Plate Dissipation (Note 4)	10 kW

Typical Operation: (Values are for two tubes)

DC Plate Voltage	5000	8000 volts
DC Grid Voltage	-115	-200 volts
Peak AF Grid-to-Grid Voltage	600	900 volts
Zero Signal DC Plate Current	0.2	0.2 amps
Max. Signal DC Plate Current	2.7	4 amps
Max. Signal DC Grid Current	160	240 milliamps
Effective Load Resistance, Plate to Plate	3500	4200 ohms
Max. Signal Driving Power (approx.)	45	100 W
Max. Signal Power Output (approx.)	8	22 kW

Note 4. Averaged over any audio-frequency cycle of sine-wave form.

Plate-Modulated RF Power Amplifier-Class C Telephony

(Carrier Conditions per tube for use with maximum modulation factor of 1.0)

Maximum Ratings: Absolute Values

DC Plate Voltage	7500 volts
DC Grid Voltage	-1000 volts
DC Plate Current	2 amps
DC Grid Current	0.4 amps
Plate Input	15 kW
Plate Dissipation	6.6 kW
Grid Dissipation	250 W

Typical Operation:

DC Plate Voltage	5000 volts
DC Grid Voltage	-400 volts
DC Plate Current	1.55 amps
DC Grid Current (approx.)	0.33 amps
Peak RF Grid Voltage	730 volts
Driving Power (approx.)	220 watts
Power Output (approx.)	6 kW

RF Power Amplifier and Oscilator-Class C Telegraphy

(Key-down conditions per tube without amplitude modulation)

Maximum Ratings: Absolute Values

DC Plate Voltage	10000 volts
DC Grid Voltage	-1000 volts
DC Plate Current	2.7 amps
DC Grid Current	0.4 amps
Plate Input	27 kW
Plate Dissipation	10 kW
Grid Dissipation	250 watts

Typical Operation:

DC Plate Voltage	5000	9000 volts
DC Grid Voltage	-300	-500 volts
Peak RF Grid Voltage	630	900 volts
DC Plate Current	1.8	2.5 amps
DC Grid Current (approx.)	0.3	0.3 amps
Driving Power (approx.)	170	250 watts
Power Output (approx.)	6	17 kW

CONSTANT CURRENT CHARACTERISTICS

NEC 8T39

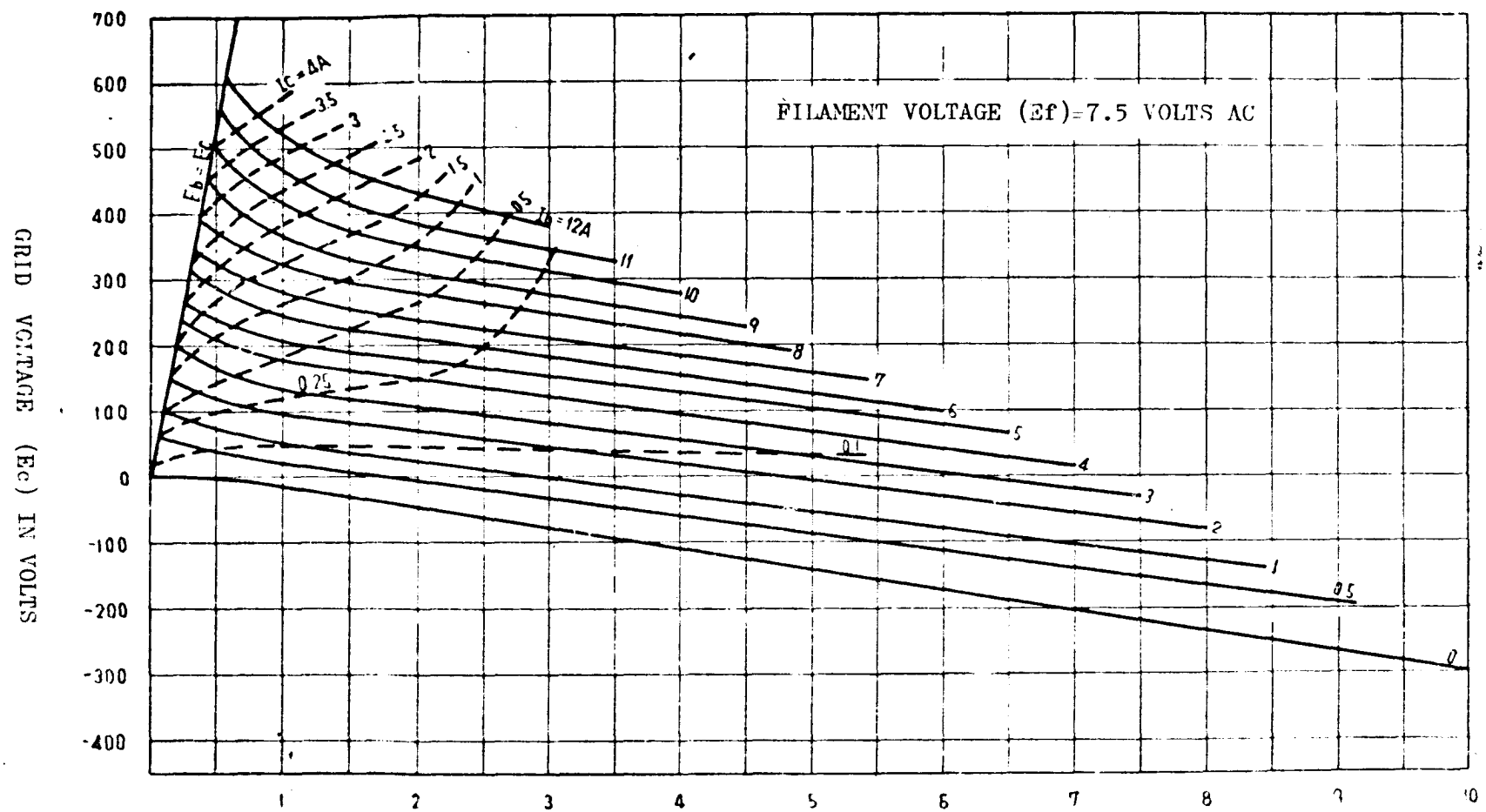

GRID VOLTAGE (Ec) IN VOLTS

PLATE VOLTAGE (Eb) IN KILOVOLTS

8T39

OUTLINE DRAWING

NEC 8T39

UNIT: mm

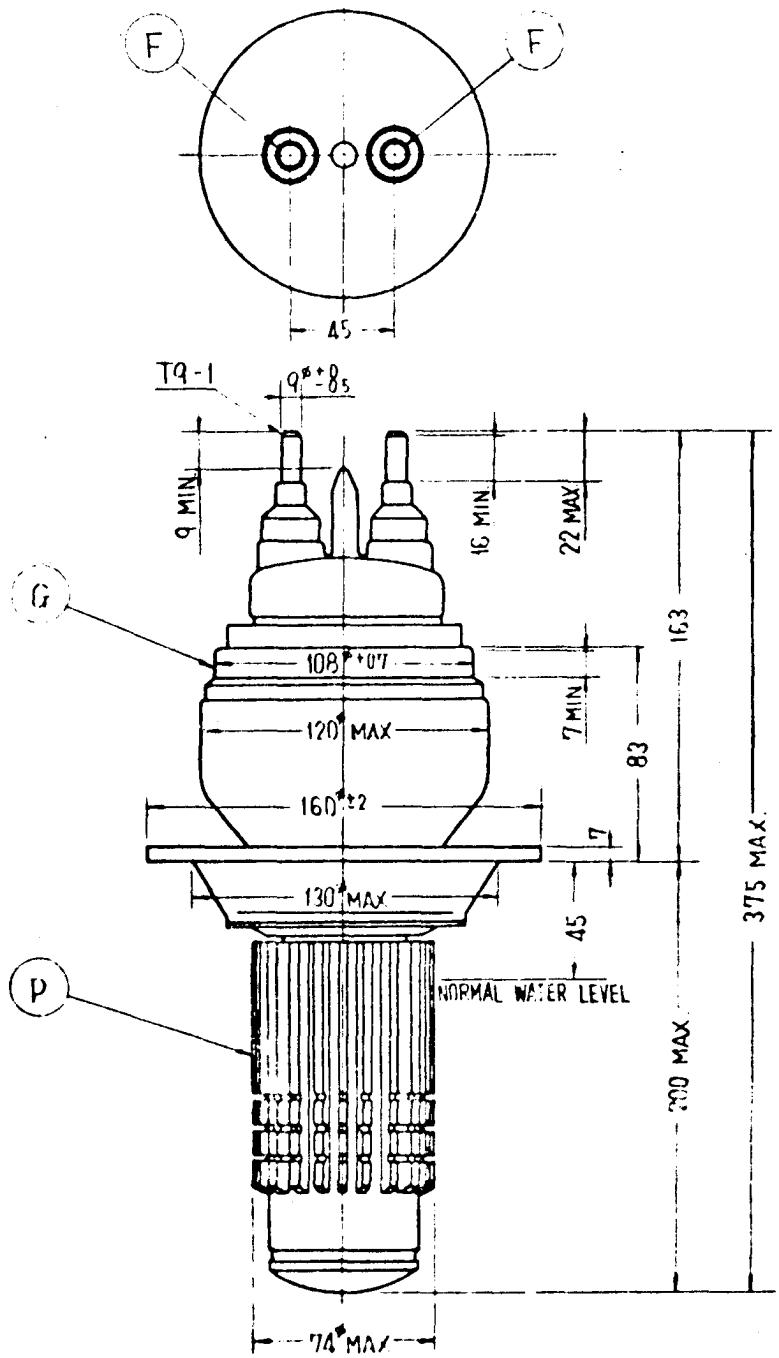

Nippon Electric Company Limited

P.O. Box 1, Takanawa, Tokyo, Japan
Cable Address: MICROPHONE TOKYO

May 1967
Printed in Japan