CATHODE RAY TUBE

8-INCH ROUND, GLASS	FACEPLATE: SPHERICAL, 40" R, CLEAR
ELECTROSTATIC FOCUS	LONG PERSISTENCE
ELECTROSTATIC DEFLECTION	POST ACCELERATION
TWO GUNS	ALUMINIZED

Description and Rating

The 8SP7 is an 8-inch dual beam cathode ray tube with electrostatic focus and deflection for sonar and oscillographic applications.

GENERAL

Data and Ratings Are Per Gun Unless Otherwise Specified

ELECTRICAL

Heater Voltage	6.3	Volts
Heater Current	0.6 ± 10%	Amperes

Focusing Method - Electrostatic
Deflecting Method - Electrostatic

Direct Interelectrode Capacitances, Maximum

Cathode to All Other Electrodes	7	μμf
Grid No. 1 to All Other Electrodes	8	μμf
D1 to D2	6	μμf
D3 to D4	6	μμf
D1 to All Other Electrodes	11.5	μμf
D2 to All Other Electrodes	11.5	μμf
D3 to All Other Electrodes	11.5	μμf
D4 to All Other Electrodes	11.5	μμf

PICKUP TUBE OPERATION
POWER TUBE DEPARTMENT
GENERAL ELECTRIC
Syracuse, N. Y.

OPTICAL

Phosphor Number	P7
Fluorescent Color	Blue-White
Phosphorescent Color	Yellow
Persistence	Long

Faceplate - Clear

MECHANICAL

Over-all Length	19 ± 3/8	Inches
Greatest Bulb Diameter.	8-3/8 ± 1/16	Inches
Minimum Useful Screen Diameter	7-1/2	Inches

Post Accelerator Bulb Contact - Recessed Small Ball Cap - JEDEC No. J1-22
Base - 25 Pin, JEDEC NO. B25-139
Basing - Special
Bulb Contact Alignment
Post Accelerator Contact Aligns With Trace of D1-D2 ± 10 Degrees
Post Accelerator Contact on Same Side as Pin No. 4

Base Alignment
D1-D2 Trace Aligns with Pin No. 4 and Tube Axis ± 10 Degrees
Positive Voltage on D1 Deflects Beam Approximately Toward Pin No. 4
Positive Voltage on D3 Deflects Beam Approximately Toward Pin No. 15

Angle Between D3-D4 and D1-D2 Traces	90 ± 1	Degrees
Angle Between Corresponding Traces.	1.5	Max. Degrees

Mounting Position - Any

MAXIMUM RATINGS

DESIGN-CENTER VALUES *
(Per Gun Unless Otherwise Specified)

Post Accelerator Voltage	6,000	Max. Volts DC
Anode Voltage #	3,000	Max. Volts DC
Ratio Post Accelerator Voltage to Anode Voltage ...	2.0	Max.
Anode Input‡	6	Max. Watts

DESIGN-CENTER VALUES * (Continued)

Focusing-Electrode Voltage	1,500	Max. Volts DC
Grid No. 1 Voltage		
Negative-Bias Value	200	Max. Volts DC
Positive-Bias Value	0	Max. Volts DC
Positive-Peak Value	2	Max. Volts
Peak Heater-Cathode Voltage		
Heater Negative with Respect to Cathode	180	Max. Volts
Heater Positive with Respect to Cathode	180	Max. Volts
Peak Voltage Between Anode and Any Deflecting Electrode	700	Max. Volts

TYPICAL OPERATING CONDITIONS
(Per Gun Unless Otherwise Specified)

Post Accelerator Voltage	6,000	Volts DC
Anode Voltage	3,000	Volts DC
Focusing-Electrode Voltage	575 to 875	Volts DC
Grid No. 1 Voltage **	-60 to -95	Volts DC
Deflection Factors		
D1 and D2 Gun A	80 to 110	Volts DC Per Inch
D1 and D2 Gun B	118 to 150	Volts DC Per Inch
D3 and D4	62 to 98	Volts DC Per Inch
Focusing-Electrode Current	-15 to +10	Microamperes
Spot Position, Undeflected +	Within 15 mm	Square
Line Width A ++	.50	Max. Millimeters
Line Width B ++	.65	Max. Millimeters
Useful Scan ◇		

MAXIMUM CIRCUIT VALUES

Grid No. 1 Circuit Resistance	1.5	Max. Megohms
Resistance in Any Deflecting Electrode Circuit	5.0	Max. Megohms

NOTES

* The maximum ratings provide a ten percent safety factor in accordance with the standard design-center system of rating cathode ray tubes. The tube will withstand the combined effects of variations in line voltage and components provided the maximum design-center values are not exceeded by more than ten percent.

NOTES: (Continued)

Anode, Grid No. 2 and Grid No. 4 which are connected together within the tube are referred to herein as anode.

** For visual extinction of focused undeflected spot.

+ The undeflected spot positions shall be within 15 mm squares whose centers are located as shown in Figure 1.

++ Measured in accordance with specification MIL-E-1 paragraph 4.12.6.1 at an anode No. 3 (post-accelerator anode) current of 25 microamperes dc. Line width "A" is measured at the useful scan center for each gun. Line width "B" is measured at ± 2-1/2 inches from the line width "A" point in the 3D4 direction.

++ Anode input equals the product of anode voltage and average current measured at the terminal.

◇ Minimum useful scan areas for each gun are shown in Figure 2.

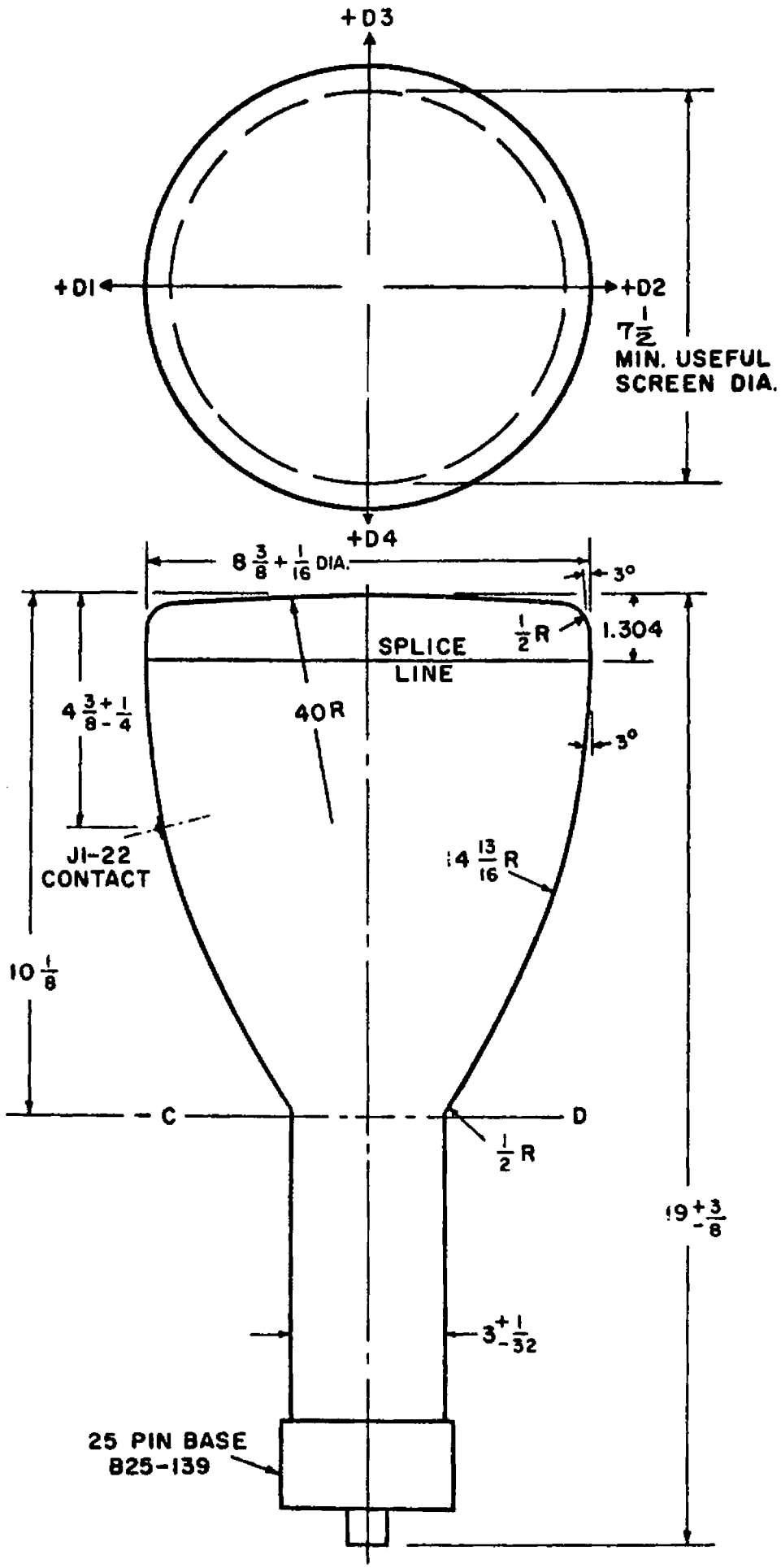
+D3
+D1
+D2
+D4
7 1/2
MIN. USEFUL
SCREEN DIA.
8 3/8 + 1/16 DIA.
3°
1/2 R
1.304
SPLICE
LINE
4 3/8 + 1/4
40R
3°
J1-22
CONTACT
14 13/16 R
10 1/8
C
D
1/2 R
19 + 3/8
3 + 1/32
25 PIN BASE
B25-139

8SP7

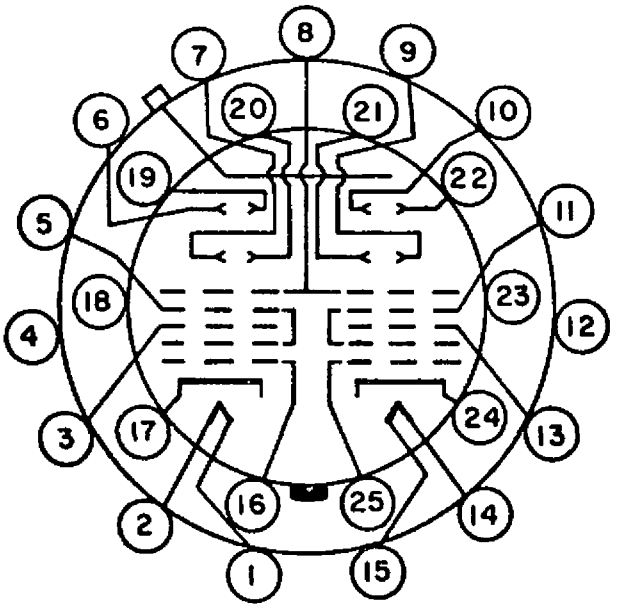

BASING DIAGRAM

UNIT A		UNIT B	
PIN NO.	ELEMENT	PIN NO.	ELEMENT
14	HEATER	1	HEATER
15	HEATER	2	HEATER
24	CATHODE	17	CATHODE
25	GRID NO. 1	16	GRID NO. 1
13	FOCUSING ELECTRODE	3	FOCUSING ELECTRODE
22	DEFLECTOR D3	19	DEFLECTOR D3
10	DEFLECTOR D4	6	DEFLECTOR D4
21	DEFLECTOR D1	7	DEFLECTOR D1
9	DEFLECTOR D2	20	DEFLECTOR D2
11	ANODE	5	ANODE
12	NO CONNECTION	4	NO CONNECTION
23	NO CONNECTION	18	NO CONNECTION
		8	SHIELD

CAP-POST ACCELERATOR

8SP7

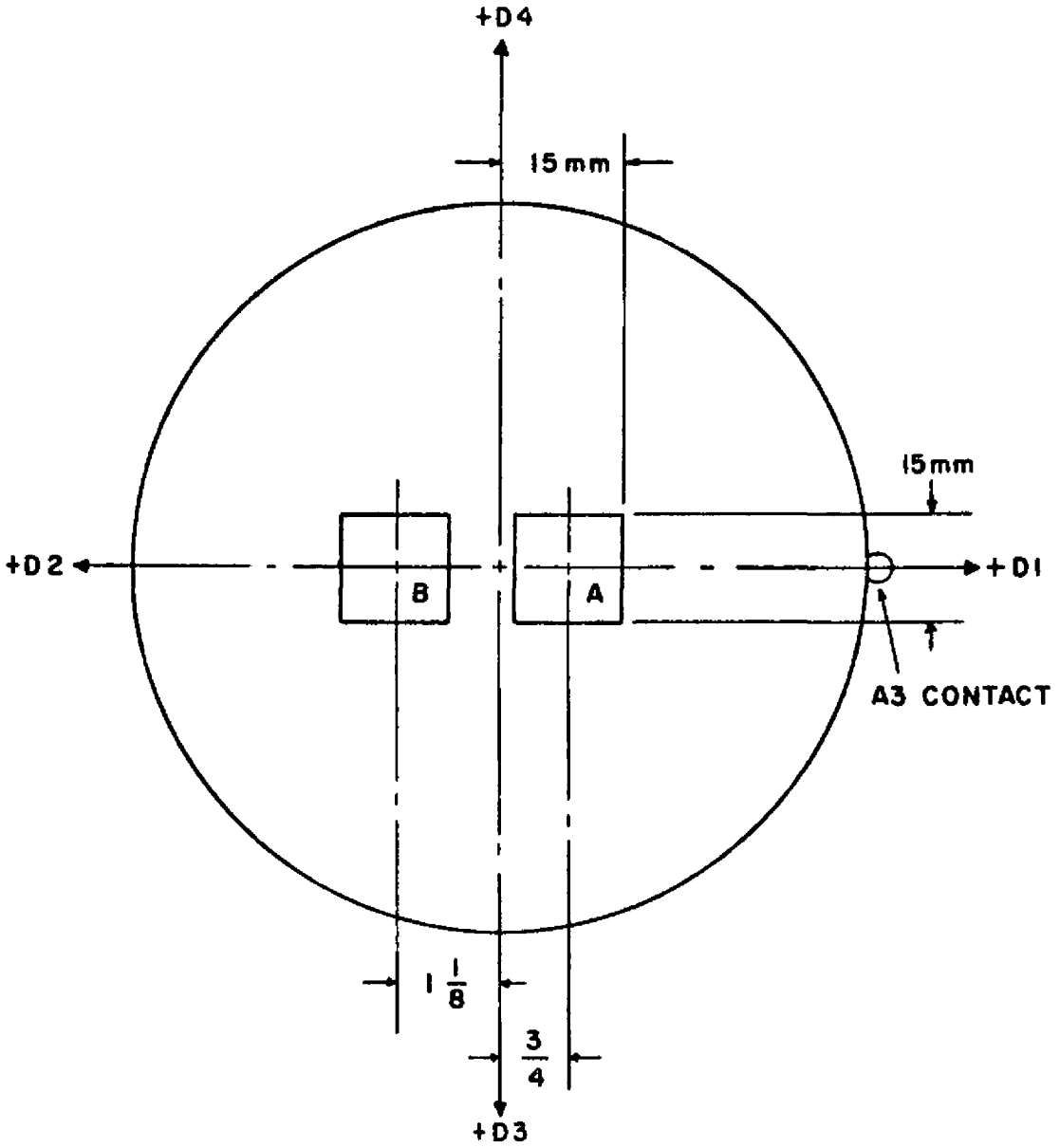

FIG. 1

8SP7

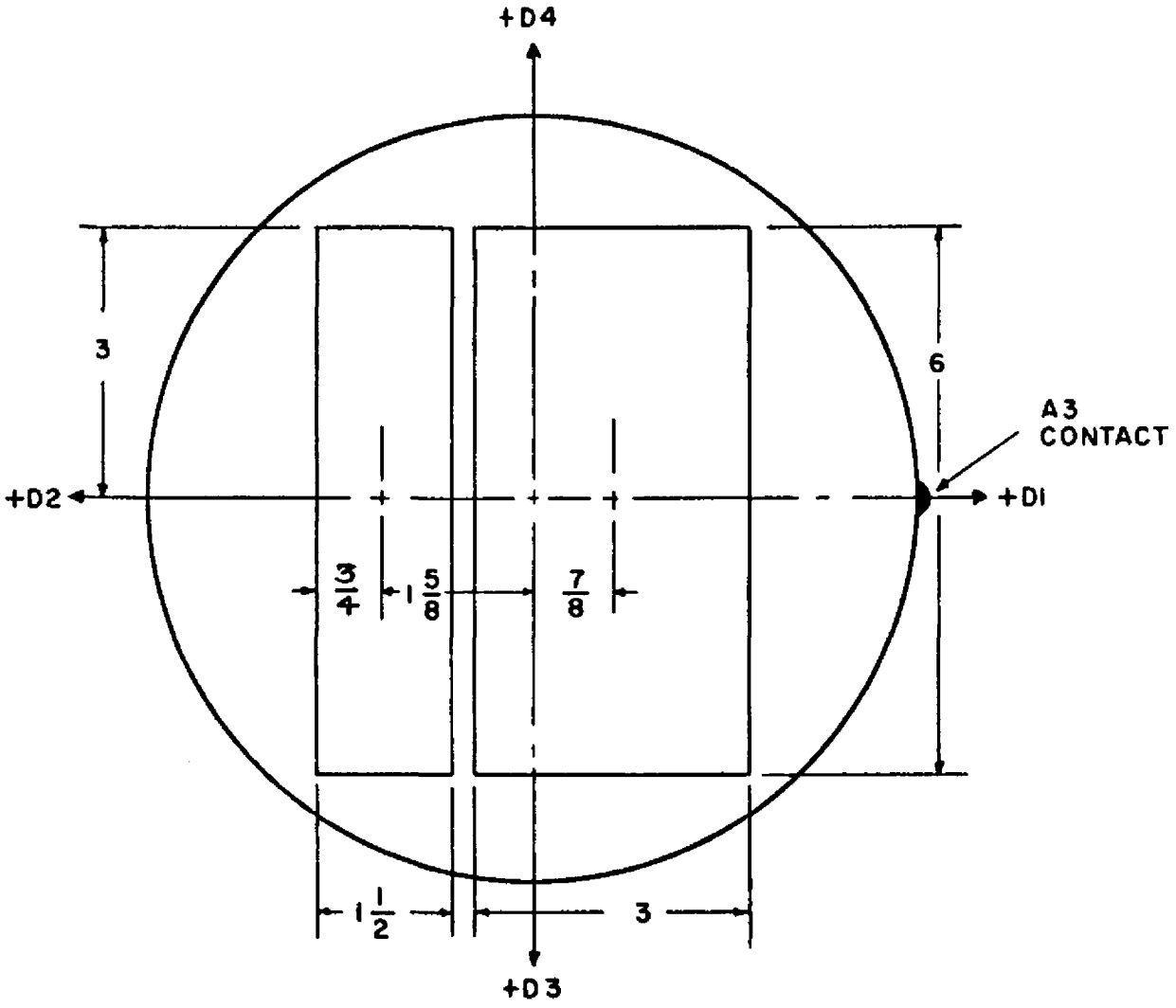

FIG. 2

8SP7