CHARACTERISTICS

GENERAL DATA

Focusing Method.....Self Focus
Deflecting Method ..... Magnetic
Deflecting Angle-Diagonal (Approx.) ..... 110 Degrees
Horizontal ..... 105 Degrees
Vertical ..... 87 Degrees

Phosphor ..... P4 Aluminized
Fluorescence ..... White
Persistence..... Short to Medium
Faceplate ..... Gray Filter Glass
Light Transmission (Approx.) .....80 Percent

ELECTRICAL DATA

Heater Voltage ..... 6.3 Volts
Heater Current ..... 0.6 ± 5% Ampere
Direct Interelectrode Capacitances (Approx.)
Cathode to All Other Electrodes..... 5 uuf
Grid No. 1 to All Other Electrodes..... 6 uuf
Ion Trap Magnet None

MECHANICAL DATA

Minimum Useful Screen Dimensions ..... 7 1/2 x 5 7/8 Inches
Bulb Contact (Recessed Small Cavity Cap) J1-21
Base ..... JETEC B7-183
Basing 8JL
J1-21 Contact Aligns with Pin Position No. 4 ± 30 Degrees
Bulb ..... C67½ Exp. 2

RATINGS

MAXIMUM RATINGS (Design Center Values)

Anode Voltage (Note 1)..... 20,000 Volts dc
Grid No. 4 Voltage (focusing electrode) - 500 to +1000 Volts dc
Grid No. 2 Voltage.....500 Volts dc
Grid No. 1 Voltage
Negative Bias Value ..... 140 Volts dc
Positive Bias Value ..... 0 Volts dc
Positive Peak Value ..... 2 Volts
Peak Heater-Cathode Voltage (Note 2)
Heater Negative with Respect to Cathode
During Warm-up Period Not to exceed 15 Sec. 410 Volts dc
After Equipment Warm-up Period.....180 Volts dc
Heater Positive with Respect to Cathode.....180 Volts dc

RECOMMENDED OPERATING CONDITIONS

Anode Voltage..... 16,000 Volts dc
Grid No. 2 Voltage..... 300 Volts dc
Grid No. 1 Voltage (Note 3)..... -35 to -72 Volts dc

CIRCUIT VALUES

Grid No. 1 Circuit resistance..... 1.5 Max. Megohm
External Conductive Coating to Anode
Capacitance- ..... None uuf. Max.
uuf. Min.

THE 8JP4 IS A DIRECT VIEW RECEIVER CHECK TUBE AND INCLUDES SUCH FEATURES AS:

- A straight gun requiring no ion trap.
- Short neck.
- Aluminized screen
- A gray tinted face affording approximately 80% light transmission.
- Rectangular glass type.
- Spherical face
- 110° deflection
- Self focus
- No outside conductive coating.

NOTES:

1. Anode Grid 5 and Grid No. 3, which are connected together within the tube, are referred to herein as anode.

2. Cathode should be returned to one side or to the midtap of the heater transformer winding.

3. Visual extinction of focused raster. Extinction of focused spot will require that these values be increased approximately 5 volts.

THOMAS ELECTRONICS, INC.
118 Ninth Street
Passaic, N. J.
GRegory 3-4040

from JETEC release #2200, May 26, 1958

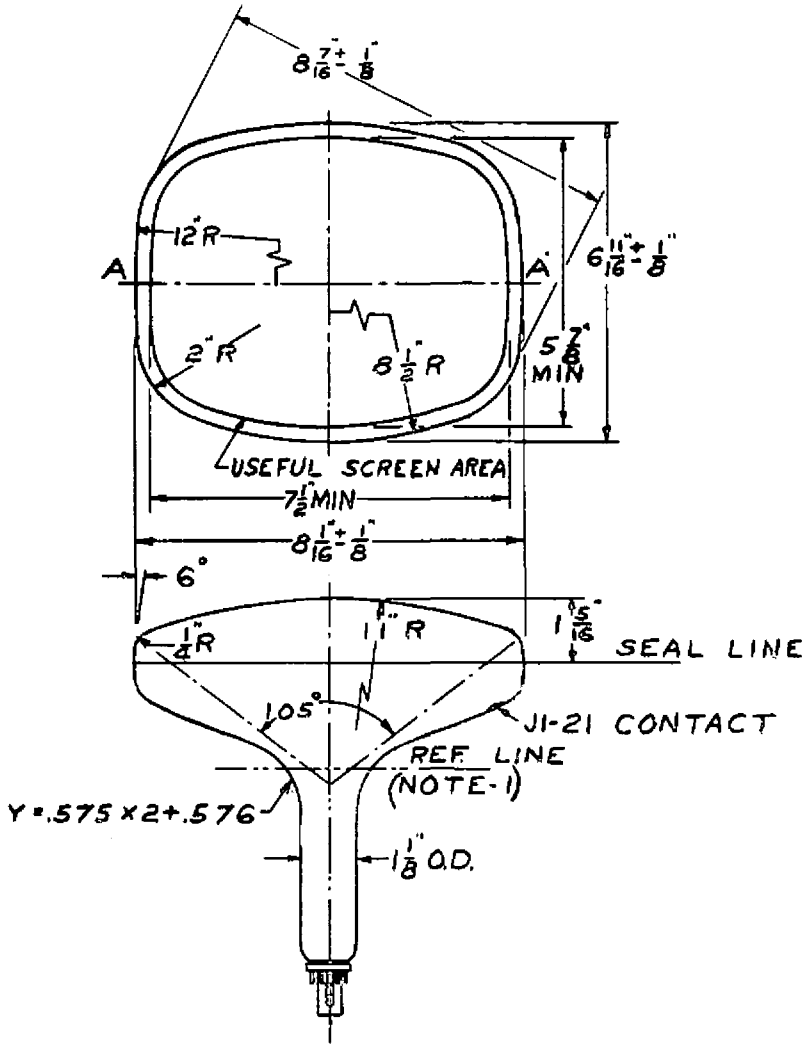

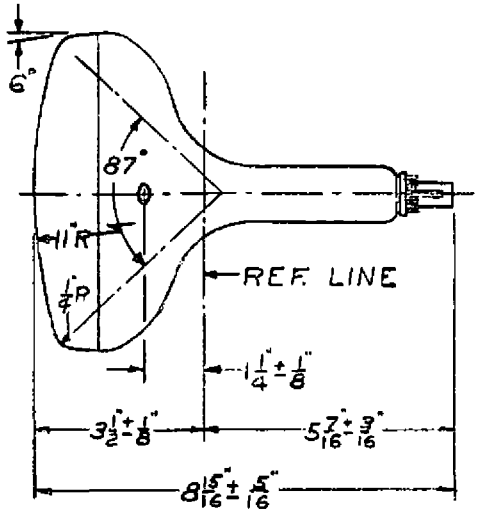

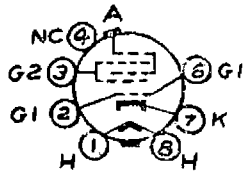

8JL
BASING DIAGRAM

DIAGRAM NOTES:

1. Reference line is determined by the plane C-C' of JETEC No. 126 [illegible] when the gauge is seated against the bulb.
2. Base Pin No. 4 aligns with horizontal centerline within 30° and [illegible] anode contact (J1-21).
3. Dimensions are in inches.

WARNING:

X-ray radiation shielding may be necessary to protect against possible danger of personal injury from prolonged exposure at close range if this tube is operated at higher than the manufacturer's Maximum Rated Anode Voltage or 16,000 volts, whichever is [illegible].