CHARACTERISTICS

GENERAL DATA

Focusing Method	Electrostatic
Deflection Method	Magnetic
Deflection Angles (Approx.)	
Horizontal	85 Degrees
Diagonal	90 Degrees
Vertical	68 Degrees
Phosphor	P4
Fluorescence	White
Persistence	Short to Medium
Faceplate	Gray Filter Glass
Light Transmittance (Approx.)	80 Percent

ELECTRICAL DATA

Heater Voltage	6.3 Volts	
Heater Current	0.6 ± 5% Ampere	
Direct Interelectrode Capacitance (Approx.)		
Cathode to All Other Electrodes	5 μμf	
Grid No. 1 to All Other Electrodes	6 μμf	
External Conductive Coating to Anode[1]	350 μμf	Max.
	250 μμf	Min.
Ion Trap Magnet	External, Single Field	

MECHANICAL DATA

Minimum Useful Screen Dimensions (Maximum Assured)	7-3/16 x 5⅜ Inches
Minimum Useful Screen Area	35.5 Sq. Inches
Neck Length	6½ ± 3/16 Inches
Overall Length	10-7/16 ± 5/16 Inches
Bulb	J67½A
Bulb Contact (Recessed Small Cavity Cap)	J1-21
Base	B6-158
Basing	12AB
Weight (Approx.)	3 Pounds

RATINGS

MAXIMUM RATINGS (Design Maximum Values)

Grid Drive Service[2]

Anode Voltage	8800 Volts	dc
Grid No. 4 Voltage (Focusing Electrode)	−550 to +550 Volts	dc
Grid No. 2 Voltage	330 Volts	dc
Grid No. 1 Voltage		
Negative Bias Value	110 Volts	dc
Negative Peak Value	145 Volts	
Positive Bias Value	0 Volts	dc
Positive Peak Value	2 Volts	

Cathode Drive Service[4]

Anode Voltage	8800 Volts	dc
Grid No. 4 Voltage (Focusing Electrode)	−550 to +550 Volts	dc
Grid No. 2 Voltage	440 Volts	dc
Cathode Voltage		
Positive Peak Value	145 Volts	
Positive Bias Value	110 Volts	dc
Negative Bias Value	0 Volts	dc
Negative Peak Value	2 Volts	
Peak Heater-Cathode Voltage		
Heater Negative with Respect to Cathode	200 Volts	
Heater Positive with Respect to Cathode	200 Volts	

QUICK REFERENCE DATA

Television Picture Tube
8" Direct Viewed
Rectangular Glass Type
Spherical Faceplate
Gray Filter Glass
Electrostatic Focus
90° Magnetic Deflection
Single Field Ion Trap
External Conductive Coating

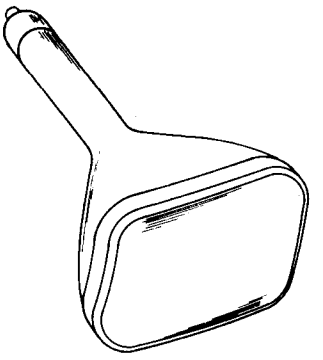

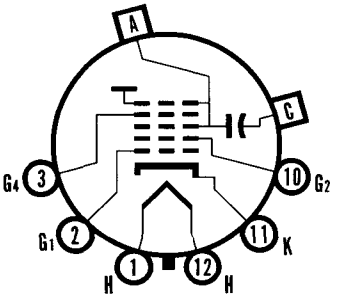

12-AB

SYLVANIA
ELECTRONIC TUBES
A Division of
Sylvania Electric Products Inc.
PICTURE TUBE OPERATIONS
SENECA FALLS, NEW YORK
Prepared and Released By The
TECHNICAL PUBLICATIONS SECTION
EMPORIUM, PENNSYLVANIA
JUNE, 1961

File Under
TELEVISION PICTURE TUBES

TYPICAL OPERATING CONDITIONS

Grid Drive Service[2]

Anode Voltage	6,000	8,000 Volts	dc
Grid No. 4 Voltage for Focus	+15 to +315	+60 to +360 Volts	dc
Grid No. 2 Voltage	150	200 Volts	dc
Grid No. 1 Voltage Required for Cutoff[3]	−13 to −35	−17 to −46 Volts	dc
Ion Trap Magnet Strength (Min.)[5]	31	36 Gausses	

Cathode Drive Service[4]

Anode Voltage	6,000	8,000 Volts
Grid No. 4 Voltage for Focus	+15 to +315	+60 to +360 Volts
Grid No. 2 Voltage	150	200 Volts
Cathode Voltage Required for Cutoff[3]	+14 to +30	+17 to +39 Volts
Ion Trap Magnet Strength (Min.)[5]	31	36 Gausses

CIRCUIT VALUES

Grid No. 1 Circuit Resistance . . . . . 1.5 Megohms Max.

NOTES:

1. *External conductive coating must be grounded.*
2. *Voltages are positive with respect to cathode unless indicated otherwise.*
3. *Visual extinction of focused raster. Extinction of stationary focused spot will require that these values be about 5 volts greater.*
4. *Voltages are positive with respect to Grid No. 1 unless indicated otherwise.*
5. *For JEDEC Ion Trap No. 117 or equivalent located with the trailing edge of the pole pieces located over the gap between Grid No. 1 and Grid No. 2 and rotated to give maximum brightness.*

WARNING:

X-ray radiation shielding may be necessary to protect against possible danger of personal injury from prolonged exposure at close range if this tube is operated at higher than the manufacturer's Maximum Rated Anode Voltage or 16,000 volts, whichever is less.

OUTLINE

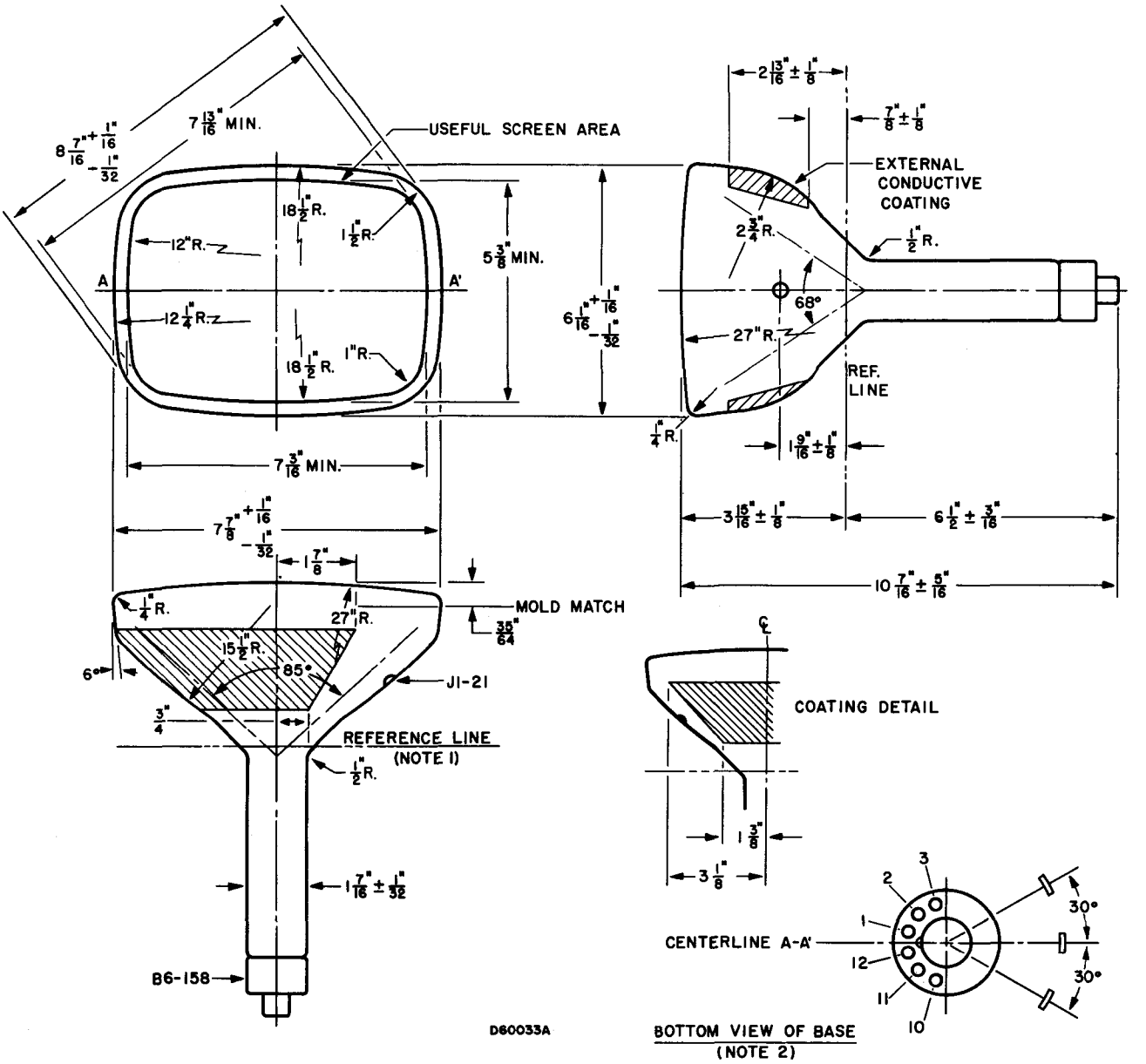

DIAGRAM NOTES:

1. *Reference line is determined by plane C-C' of JEDEC No. 116 Reference Line Gauge, when the gauge is seated against the bulb.*
2. *Base Pin Position No. 6 aligns with horizontal centerline (A-A') within 30° and is on same side as anode contact (J1-21).*